

CAL LAB

THE INTERNATIONAL JOURNAL OF METROLOGY

2026
OCTOBER
NOVEMBER
DECEMBER

DMMs and Calibrators: A Practical Introduction to DC/LF Electrical Calibration

3D Printing in the Modern Calibration Lab

Just a Lousy Engineer, His Family and a Dream

High-Current Transducer Calibration | DC TO 400 Hz | TO 11 kA

Most High-Current Calibration Stops At Magnitude.

Phase Displacement Contributes Uncertainty Too. We Publish an Accredited CMC for it.

A current transducer scales the signal and shifts it slightly in time. Most calibrations check only the scaling. That shift is phase displacement. It costs nothing when you measure current alone. Measuring power, it costs a great deal, because power depends on how voltage and current line up in time. Three times what a 0.1% ratio spec allows.

Power Factor	Error
1.00	0.00%
0.50	0.30%
0.10	1.74%

Parameter	Range	CMC (±)
DC ratio error	15 A – 11 kA	0.1 – 0.2 %
AC ratio error	5 A – 8 kA, 5 – 400 Hz[1]	0.05 – 0.2%
AC phase displacement	5 A – 8 kA, 5 – 400 Hz[1]	**0.09 – 0.11°**

Transducer nominal current. Reference transducer comparison. Expanded uncertainty, k = 2. *[1] 400 Hz limited to 2 kA.*

An ISO/IEC 17025 calibration reports measurement uncertainty and is audited. A NIST-traceable statement reports neither.

- Accredited phase displacement to 400 Hz. No other lab publishes one.
- 11 kA DC accredited. Any manufacturer, one certificate, one uncertainty basis.
- Accredited on-site calibration. Field service is on the scope, not adjacent to it.
- 10 working days. Expedited service available.

Calibrated at GMW, including: Danisense · LEM · Danfysik · AVL ABB · GE · HBK · Pearson · VAC · Yokogawa · Zimmer · Magnelab

GMW Associates
CALIBRATION

San Carlos, California • gmwcalibration.com • +1-650-282-2334

Instrumentation for electric current and magnetic field measurement
A2LA Accredited Scope | Certificate 4349.01

CAL LAB
THE INTERNATIONAL JOURNAL OF METROLOGY
www.callabmag.com

VOLUME 33, NUMBER 4

FEATURES

18 Metrology 101: DMMs and Calibrators: A Practical Introduction to DC/LF Electrical Calibration
Jack Somppi, Jesse Morse

24 3D Printing in the Modern Calibration Lab
Tyler Pazera

30 Just a Lousy Engineer, His Family and a Dream
Seth Ratner

DEPARTMENTS

2 Calendar
3 Editor's Desk
14 Industry and Research News
16 Cal-Toons by Ted Green
34 New Products and Services
36 Automation Corner

ON THE COVER: Seth Ratner points to his father, Cary Ratner, founder of East Hills Instruments in Westbury, New York. Read about Mr. Cary Ratner's engineering innovations and the family business in this issue.

CALENDAR

UPCOMING CONFERENCES & MEETINGS

The following event dates are subject to change. Visit the event URL provided for the latest information.

Jan 17-20, 2027 108th ARFTG Microwave Measurement Symposium. Tampa, FL. This event is co-located with IEEE Radio & Wireless Week (RWW) 2027, offering a unique opportunity to engage with experts in RF and microwave measurements.https://arftg.org/announcement-108th-arftg-microwave-measurement-symposium/

Feb 8-11, 2027 MSC Training Symposium. Garden Grove, CA. MSC continues to provide "Fundamental Metrology Training" in 2027 by hosting beginner, intermediate, and advanced training in many diverse disciplines. https://mscconf.com/

Feb 24-25, 2027 MWM Flow Measurement Workshop. The Woodlands, TX. This focused, in-person technical forum will bring together operators, metrology laboratories, OEMs, consultants, academia, regulators, standards stakeholders and emerging-energy specialists. The objective is to establish a high-quality, repeatable platform for the North American flow measurement community and identify key measurement gaps, recommended practices and future collaboration opportunities. https://connect.spe.org/fmts/events/27mwm

Mar 8-10, 2027 NCSLI Technical Exchange. Chicago, IL. The Technical Exchange brings together professionals from across the metrology, calibration, testing, and measurement communities for an opportunity to share knowledge, explore emerging technologies, and build meaningful industry connections. https://ncsli.org/

Mar 15-18, 2027 International Metrology Congress (CIM). Lyon, France. CIM is a premier biennial event that attracts hundreds of professionals who take advantage of the opportunity to interact with leading metrology experts. https://www.cim-metrology.org/



CAL LAB
THE INTERNATIONAL JOURNAL OF METROLOGY

PUBLISHER
MICHAEL L. SCHWARTZ

EDITOR
SITA P. SCHWARTZ

CAL LAB
PO Box 111113
Aurora, CO 80042
TEL 303-317-6670
office@callabmag.com
www.callabmag.com

Subscription fees for 1 year (4 issues)
$50 for USA, $55 Mexico/Canada,
$65 all other countries.
Visit **www.callabmag.com**
to subscribe.

Printed in the USA.
© Copyright 2026 CAL LAB.
ISSN No. 1095-4791

EDITOR'S DESK

How AI Has Changed My Work

Since this past summer, I've been bombarded with abstracts and white papers. (The feature articles we publish are still mainly solicited.) Every inquiry requires me to drop what I'm doing, do a critical read and put together a response to the "author." I put author in quotes because I am no longer sure I'm responding to an actual person. A few of these inquiries actually disclose their material as AI-assisted, but I'm left believing most do not bother with such courtesy. Despite all that, I do not want to throw this ugly baby out with the bath water for the following reasons:

1. I do not want to assume our valuable authors are resorting to AI for *generating content*—don't be that person!
2. AI is a useful tool for those not comfortable with writing.
3. AI helps those who have the knowledge be more productive in the direct transfer of that knowledge.

Okay, so the point that grinds me the most is those who generate AI content expect a human to manually read their submissions and spend the time to evaluate whether or not it has any value and respond appropriately. From my perspective, this is people using AI and pitting those resources it took to generate that content, against my time and energy. This is the source of my resentment. And, from reading other editors' posts on LinkedIn, I know I am not alone.

I have to the weigh pros and cons of accepting AI-assisted content, but really, things have changed and my work is different.

But sometimes, **something fun** comes along. Seth Ratner, CEO of East Hills Instruments, in the state of New York, reached out to us earlier this year. He contributed a great cover photo and wrote us a short story on the origins of this small, family manufacturing business. Seth is a high-energy guy with lots of ideas, one of which manifested into a multi-season reality show! Read his story in this issue, "Just a Lousy Engineer, His Family and a Dream."

Wait, that's not all! One of our readers and long-time volunteer and Past President of NCSLI, Mike Suraci, got inspired by the Apr-Jun 2026 cover. He reached out to Tyler Pazera who wrote us a great article, titled "3D Printing in the Modern Calibration Lab," on his experience implementing a special 3D project. In this article, Tyler neatly steps through the challenges and considerations in the fabrication of a Helmholtz coil calibration setup.

For our Metrology 101 article, experienced electrical measurement educators and consultants, Jack Somppi and Jesse Morse, put together a primary paper on the ubiquitous digital multimeter called, "DMMs and Calibrators: A Practical Introduction to DC/LF Electrical Calibration." Both Jack and Jesse have contributed their expertise at training events for decades, helping to improve the skills in generations of electrical technicians. So, I'm appreciative of the time they've given and their contributions to this publication!

Happy Measuring,

Sita Schwartz

CALENDAR

Mar 22-24, 2027 DCC Conference (Hybrid Event). Berlin, Germany. Over the past decade, the conference has evolved into a central platform for sharing innovations, aligning stakeholder needs, and advancing the harmonization of machine-readable data and metadata in metrology. https://www.dcc-conference.ptb.de/7th-international-dcc-conference

Mar 22-25, 2027 The International Multi-Conference on Systems, Signals and Devices (SSD). Tunis, Tunisia. The International Multi-Conference on Systems, Signals and Devices (SSD) co-sponsored by IEEE focuses on research, development and applications associated with the field of Electrical Engineering and Information Technology. https://ssd-multiconf.org/

Apr 26-29, 2027 ANNCON27. Las Vegas, NV. The A2LA Annual Conference is the ultimate opportunity for accreditation professionals to meet face-to-face, learn new skills, and collaborate on topics associated with the accreditation industry. https://a2la.org/annual_conference/

May 11-13, 2027 Sensor and Measurement Science International Conference. Nuremburg, Germany. https://www.smsi-conference.com/

May 17-20, 2027 IEEE International Instrumentation and Measurement Technology Conference. Chongqing, China. I2MTC focuses on all aspects of instrumentation and measurement science and technology research development and applications. The list of program topics includes but is not limited to: Measurement Science &Education, Measurement Systems, Measurement Data Acquisition, Measurements of Physical Quantities, and Measurement Applications. https://ieee-ims.org/event/conference/2027-ieee-international-instrumentation-and-measurement-technology-conference

May 23-28, 2027 IEEE International MTT Symposia (IMS). San Antonio, TX. IMS2027 kicks off with the IEEE MTT-S RF Integrated Circuits (RFIC) Symposium, then introduces two symposia formed out of traditional IMS technical content, the IEEE MTT-S RF Technology & Techniques (RFTT) Symposium and the IEEE MTT-S RF Systems & Applications (RFSA) Symposium, before concluding the week with the ARFTG Microwave Measurement Conference. https://ims-ieee.org/

Jun 7-9, 2027 IEEE International Workshop on Metrology for Living Environment. Ancona, Italy. The IEEE MetroLivEnv2027 - aims to be a solid reference of the technical community to present and discuss the most recent results of scientific and technological research for the living environment, with particular emphasis on applications and new trends. https://www.metrolivenv.org/

SEMINARS & WEBINARS: Dimensional

Jan 5, 2027 Hands-On Precision Gage Calibration Repair and Training. Virtual. IICT Enterprises. This is a virtual, 1-day, online, "Hands-On" Precision Gage Calibration and Repair Training. This training covers all the topics in the 2-day class. Just a longer day! https://calibrationtraining.com/

Jan 7-8, 2027 Hands-On Precision Gage Calibration & Repair Training. Virtual. IICT Enterprises. This 2-day online precision gage and repair training offers specialized training in calibration and repair for the individual who has some knowledge of basic Metrology. https://calibrationtraining.com/

Jan 13-14, 2027 Hands-On Precision Gage Calibration & Repair Training. Bloomington, MN. IICT Enterprises. This is an in-person, public, 2-day, precision gage and repair training offers specialized training in calibration and repair for the individual who has some knowledge of basic Metrology. https://calibrationtraining.com/

Jan 21, 2027 Hands-On Gage Calibration & Repair on Mics, Calipers, and Indicators. Virtual. IICT Enterprises. This is a special (approximately 3-4 hour) Calibration and Repair Training on Micrometers, Calipers, and Indicators. This training meets ISO training requirements for Precision Gage Training. https://calibrationtraining.com/

Jan 26, 2027 Hands-On Gage Calibration & Repair on Mics, Calipers, and Indicators. Virtual. IICT Enterprises. This is a special (approximately 3-4 hour) Calibration and Repair Training on Micrometers, Calipers, and Indicators. This training meets ISO training requirements for Precision Gage Training. https://calibrationtraining.com/

Jan 26-28, 2027 Dimensional Gage Calibration (EDU-115). Aurora, IL. Mitutoyo America's Gage Calibration course is a unique, active, educational experience designed specifically for those who plan and perform calibrations of dimensional measuring tools, gages, and instruments. https://www.mitutoyo.com/

Feb 2-4, 2027 Introduction to Dimensional Metrology Hand Tools V (EDU-105). Aurora, IL. Mitutoyo. This is a three-day class for entry-level team members who need to learn the fundamentals of the steel rule, caliper, micrometer, pin gage, gage block, surface plate, height gage, indicator and stands, angle block, v-block, sine bar, depth gages, telescoping gages, hol test gages, bore gages, and thread gages. https://www.mitutoyo.com/course-session/edu-105-introduction-to-dimensional-metrology-hand-tools-v-3-day-in-person-4/

CALENDAR

Feb 9, 2027 Hands-On Gage Calibration & Repair on Mics, Calipers, and Indicators. Virtual. IICT Enterprises. This is a special (approximately 3-4 hour) Calibration and Repair Training on Micrometers, Calipers, and Indicators. This training meets ISO training requirements for Precision Gage Training. https://calibrationtraining.com/

Feb 11-12, 2027 Hands-On Precision Gage Calibration and Repair Training. Virtual. IICT Enterprises. This 2-day online precision gage and repair training offers specialized training in calibration and repair for the individual who has some knowledge of basic Metrology. https://calibrationtraining.com/

Feb 17-18, 2027 Dimensional Gage Calibration (EDU-113). Marlborough, MA. Mitutoyo America's Gage Calibration course is a unique, active, educational experience designed specifically for those who plan and perform calibrations of dimensional measuring tools, gages, and instruments. https://www.mitutoyo.com/

Feb 17, 2027 Hands-On Precision Gage Calibration and Repair Training. Virtual. IICT Enterprises. This is a virtual, 1-day, online, "Hands-On" Precision Gage Calibration and Repair Training. This training covers all the topics in the 2-day class. Just a longer day! https://calibrationtraining.com/calibration-metrology-training-events/

Feb 22-23, 2027 Hands-On Precision Gage Calibration & Repair Workshop. Eau Claire, WI. IICT Enterprises. This 2-day online precision gage and repair training offers specialized training in calibration and repair for the individual who has some knowledge of basic Metrology. https://calibrationtraining.com/calibration-metrology-training-events/

Feb 24, 2027 Introduction to Dimensional Gage Calibration (1/2-day). Virtual. Mitutoyo America's Gage Calibration courses are unique, active, educational experience designed specifically for those who plan and perform calibrations of dimensional measuring tools, gages, and instruments. This course is taught in the Mitutoyo Institute of Metrology's Training Lab in Aurora, IL and broadcast live in a virtual session. https://www.mitutoyo.com/

IndySoft

The World's Most Powerful Calibration Management Software

The platform calibration labs trust for traceability, turnaround, and control



To learn more, visit: www.indysoft.com

IndySoft Enterprise for Commercial Labs equips calibration labs with the flexibility to serve both internal quality needs and external customer demands—all while maintaining ISO/IEC 17025 compliance. From job tracking to invoicing, IndySoft streamlines operations, boosts efficiency, and delivers the insights to scale your business profitably.

Key Advantages

- Automated Scheduling
- Audit-Ready Records
- Digital Certificates
- Custom Workflows

Industries: Aerospace · Defense · Manufacturing · Medical · Energy · Calibration Labs · Research · Government

CALENDAR

Feb 25, 2027 Hands-On Gage Calibration & Repair on Mics, Calipers, and Indicators. Virtual. IICT Enterprises. This is a special (approximately 3-4 hour) Calibration and Repair Training on Micrometers, Calipers, and Indicators. This training meets ISO training requirements for Precision Gage Training. https://calibrationtraining.com/

Mar 23-24, 2027 Dimensional Gage Calibration (EDU-113). Renton, WA. Mitutoyo America's Gage Calibration course is a unique, active, educational experience designed specifically for those who plan and perform calibrations of dimensional measuring tools, gages, and instruments. https://www.mitutoyo.com/

Apr 6-7, 2027 Dimensional Gage Calibration (EDU-113). City of Industry, CA. Mitutoyo America's Gage Calibration course is a unique, active, educational experience designed specifically for those who plan and perform calibrations of dimensional measuring tools, gages, and instruments. https://www.mitutoyo.com/

Apr 7, 2027 Introduction to Dimensional Metrology Hand Tools I- Fundamental Tools (EDU-101). Houston, TX. Mitutoyo. EDU-101 is a one-day class for entry-level team members who need tolearn the fundamentals of the steel rule, caliper, micrometer, pingage, and gage block.https://www.mitutoyo.com/

Apr 20-21, 2027 Dimensional Gage Calibration (EDU-113). Huntersville, NC. Mitutoyo America's Gage Calibration course is a unique, active, educational experience designed specifically for those who plan and perform calibrations of dimensional measuring tools, gages, and instruments. https://www.mitutoyo.com/

Jun 23-24, 2027 Dimensional Measurement. Port Melbourne, VIC. Australian NMI. This two-day course presents a comprehensive overview of the fundamental principles in dimensional metrology and geometric dimensioning and tolerancing. https://shop.measurement.gov.au/collections/physical-metrology-training

SEMINARS & WEBINARS: Electrical

Jan 4-7, 2027 MET-101 Basic Hands-On Metrology. Everett, WA. Fluke Calibration. This Metrology 101 basic metrology training course introduces the student to basic measurement concepts, basic electronics related to measurement instruments and math used in calibration. https://www.fluke.com/

Apr 5-8, 2027 MET-301 Advanced Hands-On Metrology. Everett, WA. Fluke Calibration. This course introduces the student to advanced measurement concepts and math used in standards laboratories. https://www.fluke.com/

May 3-6, 2027 MET-101 Basic Hands-On Metrology. Everett, WA. Fluke Calibration. This Metrology 101 basic metrology training course introduces the student to basic measurement concepts, basic electronics related to measurement instruments and math used in calibration. https://www.fluke.com/

SEMINARS & WEBINARS: General

Jan 25-29, 2027 Fundamentals of Metrology Seminar. Gaithersburg, MD. The NIST Office of Weights and Measures (OWM) Fundamentals of Metrology seminar is an intensive course that introduces participants to measurement systems, units, good laboratory practices, data integrity, measurement uncertainty, and Quality Management Systems.https://www.nist.gov/pml/owm/owm-products-and-services/training-classes-and-events

Apr 5-9, 2027 Fundamentals of Metrology Seminar. Gaithersburg, MD. The NIST Office of Weights and Measures (OWM) Fundamentals of Metrology seminar is an intensive course that introduces participants to measurement systems, units, good laboratory practices, data integrity, measurement uncertainty, and Quality Management Systems. https://www.nist.gov/pml/owm/owm-products-and-services/training-classes-and-events

SEMINARS & WEBINARS: Industry Standards

Jan 11-14, 2027 Understanding ISO/IEC 17025:2017 for Testing & Calibration Laboratories. Virtual. QC Training. This course is a comprehensive review of the philosophies and requirements of ISO/IEC 17025:2017. The participant will gain an understanding of conformity assessment using the risks and opportunities-based approach. https://qctraininginc.com/course/understanding-iso-iec-170252017-for-testing-calibration-laboratories/

Jan 26-29, 2027 Auditing Your Laboratory to ISO/IEC 17025:2017. Virtual. QC Training. This course will introduce participants to ISO/IEC 19011, the guideline for auditing management systems as applied to ISO/IEC 17025:2017. The participant will learn about auditing principles and develop skills for performing higher-value internal audits. https://qctraininginc.com/course/auditing-your-laboratory-to-iso-iec-170252017/

Jan 29, 2027 ISO 9001:2026 Transition Training (Half-day). Virtual. An overview of the changes between ISO 9001:2015 and ISO 9001:2026, including transition requirements and implementation considerations to help organizations successfully update and maintain their Quality Management Systems (QMS). https://qctraininginc.com/course/iso-90012026-transition-training/

"Essential Metrology Training"

Annual MSC Training Symposium

Garden Grove, California | Feb 8-11, 2027

- NIST Seminars
- Tutorial Workshops
- Technical Sessions
- Hands-On Training



Measurement Science Conference

mscconf.com | information@msc-conf.com

CALENDAR

Feb 17-18, 2027 Understanding ISO/IEC 17025:2017 for Testing & Calibration Laboratories. Virtual. QC Training. This course is a comprehensive review of the philosophies and requirements of ISO/IEC 17025:2017. https://qctraininginc.com/

Feb 19, 2027 ISO 9001:2026 Transition Training (Half-Day). Virtual. QC Training. An overview of the changes between ISO 9001:2015 and ISO 9001:2026, including transition requirements and implementation considerations to help organizations successfully update and maintain their Quality Management Systems (QMS). https://qctraininginc.com/course/iso-90012026-transition-training/

Feb 22-25, 2027 Auditing Your Laboratory to ISO/IEC 17025:2017. Virtual. QC Training. This course will introduce participants to ISO/IEC 19011, the guideline for auditing management systems as applied to ISO/IEC 17025:2017. https://qctraininginc.com/

Feb 23-24, 2027 Understanding the Requirements and Concepts of ISO/IEC 17025:2017. ANAB Live online course. Understand requirements of ISO/IEC 17025:2017, including general, structural, resource, process, and management system requirements. https://anab.ansi.org/training/

Feb 23-24, 2027 Managing Risk in Your Organization. Virtual. QC Training. This course introduces the participants to risk-based thinking from an international standards perspective. The participant will learn risk concepts from ISO 31000 and ISO 9000 and become familiar with industry tools used to assess and manage risk in the ISO conformity assessment arena. https://qctraininginc.com/

Feb 23-25, 2027 Internal Auditing to ISO/IEC 17025:2017 (non-forensic). Virtual. ANAB. This training is designed for laboratory managers, technical staff, and others who want or need to learn better audit practices. https://anab.ansi.org/training/internal-auditing-to-iso-iec-17025-2017/

Mar 8-9, 2027 Understanding ISO/IEC 17025:2017 for Testing & Calibration Laboratories. Boulder, CO. QC Training. This course is a comprehensive review of the philosophies and requirements of ISO/IEC 17025:2017. https://qctraininginc.com/

Mar 8-11, 2027 Understanding ISO/IEC 17025:2017 for Testing & Calibration Laboratories. Virtual. QC Training. This course is a comprehensive review of the philosophies and requirements of ISO/IEC 17025:2017. https://qctraininginc.com/

Mar 10-11, 2027 Auditing Your Laboratory to ISO/IEC 17025:2017. Boulder, CO. QC Training. This course will introduce participants to ISO/IEC 19011, the guideline for auditing management systems as applied to ISO/IEC 17025:2017. https://qctraininginc.com/

Mar 16-17, 2027 Auditing Your Laboratory to ISO/IEC 17025:2017. Virtual. QC Training. This course will introduce participants to ISO/IEC 19011, the guideline for auditing management systems as applied to ISO/IEC 17025:2017. https://qctraininginc.com/

Mar 19, 2027 ISO 9001:2026 Transition Training. Virtual. QC Training. An overview of the changes between ISO 9001:2015 and ISO 9001:2026, including transition requirements and implementation considerations to help organizations successfully update and maintain their Quality Management Systems (QMS). https://qctraininginc.com/course/iso-90012026-transition-training/

Apr 1, 2027 Calibration Certificate Evaluation Webinar. Virtual. NIST. This 2-hour webinar from the NIST Office of Weights and Measures (OWM) introduces concepts necessary to successfully implement ISO/IEC17025:2017 compliant calibration certificates within the laboratory and evaluate service provider certificates. https://www.nist.gov/pml/owm/owm-products-and-services/training-classes-and-events

Apr 6-7, 2027 Understanding ISO/IEC 17025:2017 for Testing & Calibration Laboratories. Virtual. QC Training. This course is a comprehensive review of the philosophies and requirements of ISO/IEC 17025:2017. https://qctraininginc.com/

Apr 13-14, 2027 Understanding the Requirements and Concepts of ISO/IEC 17025:2017. ANAB Live online course. Understand requirements of ISO/IEC 17025:2017, including general, structural, resource, process, and management system requirements. https://anab.ansi.org/training/

Apr 16, 2027 ISO 9001:2026 Transition Training. Virtual. QC Training. An overview of the changes between ISO 9001:2015 and ISO 9001:2026, including transition requirements and implementation considerations to help organizations successfully update and maintain their Quality Management Systems (QMS). https://qctraininginc.com/course/iso-90012026-transition-training/

Apr 19-22, 2027 Auditing Your Laboratory to ISO/IEC 17025:2017. Virtual. QC Training. This course will introduce participants to ISO/IEC 19011, the guideline for auditing management systems as applied to ISO/IEC 17025:2017. The participant will learn about auditing principles and develop skills for performing higher-value internal audits. https://qctraininginc.com/course/auditing-your-laboratory-to-iso-iec-170252017/

CALENDAR

Apr 20-21, 2027 Laboratories: Understanding the Requirements and Concepts of ISO/IEC17025:2017. Virtual. ANAB. Understand requirements of ISO/IEC 17025:2017, including general, structural, resource, process, and management system requirements. Learn practical concepts, such as impartiality, documents control, ensuring validity of results and risk management. https://anab.ansi.org/

Apr 20-22, 2027 Internal Auditing to ISO/IEC 17025:2017 (non-forensic). Virtual. ANAB. This training is designed for laboratory managers, technical staff, and others who want or need to learn better audit practices. https://anab.ansi.org/training/internal-auditing-to-iso-iec-17025-2017/

Apr 25, 2027 Managing Risk in Your Organization. Las Vegas, NV. QC Training. This course introduces the participants to risk-based thinking from an international standards perspective. The participant will learn risk concepts from ISO 31000 and ISO 9000 and become familiar with industry tools used to assess and manage risk in the ISO conformity assessment arena. https://qctraininginc.com/

Apr 25-26, 2027 Auditing Your Laboratory to ISO/IEC 17025:2017. Las Vegas, NV. QC Training. This course will introduce participants to ISO/IEC 19011, the guideline for auditing management systems as applied to ISO/IEC 17025:2017. The participant will learn about auditing principles and develop skills for performing higher-value internal audits. https://qctraininginc.com/

Apr 25-26, 2027 Understanding ISO/IEC 17025:2017 for Testing & Calibration Laboratories. Las Vegas, NV. QC Training. This course is a comprehensive review of the philosophies and requirements of ISO/IEC 17025:2017. https://qctraininginc.com/

May 3-6, 2027 Understanding ISO/IEC 17025:2017 for Testing & Calibration Laboratories. Virtual. QC Training. This course is a comprehensive review of the philosophies and requirements of ISO/IEC 17025:2017. https://qctraininginc.com/

May 11, 2027 Managing Risk in Your Organization. Virtual. QC Training. This course introduces the participants to risk-based thinking from an international standards perspective. The participant will learn risk concepts from ISO 31000 and ISO 9000 and become familiar with industry tools used to assess and manage risk in the ISO conformity assessment arena. https://qctraininginc.com/

PRECISION CURRENT SHUNTS

- *HIGH ACCURACY*
- *LOW TEMPERATURE COEFFICIENT*
- *STABLE OVER TIME*
- *OPTIONAL TEMPERATURE SENSOR*
- *INCLUDES ACCREDITED CALIBRATION*
- *CALIBRATION SERVICE TO 3000 A*

MODEL	ACCURACY		MODEL	ACCURACY
CS-0.1	<0.005 %		CS-200	<0.02 %
CS-1	<0.005 %		CS-300	<0.025 %
CS-5	<0.01 %		CS-500	<0.02 %
CS-10	<0.01 %		CS-1000	<0.025 %
CS-20	<0.01 %		CS-2000	<0.04 %
CS-50	<0.01 %		CS-3000	<0.04 %
CS-100	<0.01 %		MCS	MULTIPLE
CUSTOM MODELS AVAILABLE				

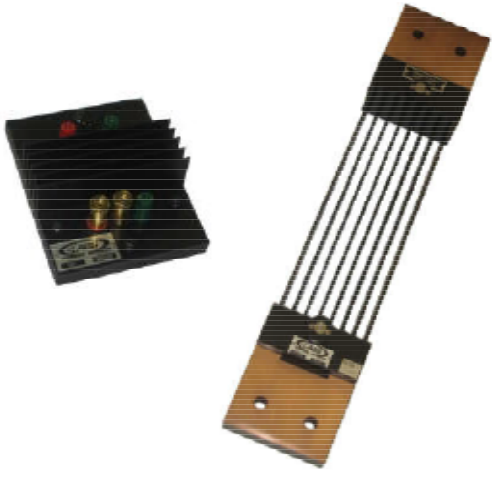

SEE WWW.OHM-LABS.COM FOR DETAILS

-LABS
Excellence in Resistance

611 E. CARSON ST. PITTSBURGH, PA 15203
TEL 412-431-0640 FAX 412-431-0649
WWW.OHM-LABS.COM

ACCREDITED

CALENDAR

May 14, 2027 ISO 9001:2026 Transition Training. Virtual. QC Training. An overview of the changes between ISO 9001:2015 and ISO 9001:2026, including transition requirements and implementation considerations to help organizations successfully update and maintain their Quality Management Systems (QMS). https://qctraininginc.com/course/iso-90012026-transition-training/

May 18-19, 2027 Auditing Your Laboratory to ISO/IEC 17025:2017. Virtual. QC Training. This course will introduce participants to ISO/IEC 19011, the guideline for auditing management systems as applied to ISO/IEC 17025:2017. https://qctraininginc.com/

SEMINARS & WEBINARS: Lab Management

Feb 18, 2027 Conducting an Effective Management Review Webinar. Virtual. NIST OWM. This 2-hour webinar from the NIST Office of Weights and Measures (OWM) introduces the Laboratory Management Review process as an essential tool to align top management with laboratory operations and foster quality calibration practices. https://www.nist.gov/

Mar 31, 2027 Calibration Laboratory Essentials: From Setup to Quality Management (EDU-510). Aurora, IL. Mitutoyo. This practical one-day program is designed for professionals involved in establishing, managing, or improving calibration laboratories. https://www.mitutoyo.com/

SEMINARS & WEBINARS: Mass

May 17-28, 2027 Mass Metrology Seminar. Gaithersburg, MD. NIST OWM. The NIST Office of Weights and Measures (OWM) Mass Metrology seminar is a two-week, "hands-on" course. https://www.nist.gov/pml/owm/owm-products-and-services/training-classes-and-events

SEMINARS & WEBINARS: Measurement Uncertainty

Feb 3, 2027 Estimating Measurement Uncertainty for Physical Metrologists. Lindfield, NSW. Australian NMI. The course provides a clear, systematic method for understanding and applying uncertainty estimation techniques in physical metrology with focus on real-world measurement and calibration examples. https://shop.measurement.gov.au/

Feb 3-4, 2027 Introduction to Measurement Uncertainty. Virtual Event. A2LAWPT. This introductory course provides calibration and testing laboratory professionals with a practical foundation in measurement uncertainty evaluation. https://a2lawpt.org/courses/

Feb 16-17, 2027 Measurement Confidence: Fundamentals. Virtual. ANAB. This Measurement Confidence course introduces the foundational concepts of measurement traceability, measurement assurance, and measurement uncertainty and details ISO/IEC 17025 and ISO/IEC 17020 requirements. https://anab.ansi.org/

Feb 18-19, 2027 Measurement Uncertainty: Practical Applications. Virtual. ANAB. This class covers concepts and accreditation requirements associated with measurement traceability, measurement assurance, and measurement uncertainty. https://anab.ansi.org/

Mar 2-3, 2027 Applied Measurement Uncertainty for Calibration Laboratories Class. Virtual. QC Training. During this Applied Measurement Uncertainty for Calibration Laboratories course, the participant will be introduced to several tools and techniques that can be applied in the calibration laboratory environment to efficiently and effectively create measurement uncertainty budgets which comply with ISO/IEC 17025 requirements. https://qctraininginc.com/

Mar 15-16, 2027 Applied Measurement Uncertainty for Calibration and Testing Laboratories. Boulder, CO. A2LA WPT. Designed for professionals in testing and calibration laboratories, it provides a comprehensive understanding of measurement uncertainty in line with ISO/IEC 17025 requirements. https://a2lawpt.org/

Apr 6-7, 2027 Measurement Confidence: Fundamentals. Virtual. ANAB. This Measurement Confidence course introduces the foundational concepts of measurement traceability, measurement assurance, and measurement uncertainty and details ISO/IEC 17025 and ISO/IEC 17020 requirements. https://anab.ansi.org/

Apr 7-8, 2027 Introduction to Measurement Uncertainty. Virtual. A2LA WPT. This introductory measurement uncertainty training course provides calibration and testing laboratory professionals with a practical foundation in measurement uncertainty evaluation. https://a2lawpt.org/

Apr 8-9, 2027 Measurement Uncertainty: Practical Applications. Virtual. ANAB. This class covers concepts and accreditation requirements associated with measurement traceability, measurement assurance, and measurement uncertainty. https://anab.ansi. org/

Apr 25-26, 2027 Applied Measurement Uncertainty for Calibration and Testing Laboratories. Las Vegas, NV. A2LA WPT. Designed for professionals in testing and calibration laboratories, it provides a comprehensive understanding of measurement uncertainty in line with ISO/IEC 17025 requirements. https://a2lawpt.org/

alcami®

Drug Product Manufacturing

Laboratory Services

Pharma Storage & Services



Calibration built for pharma.

PROVEN IN-HOUSE

Ready for yours.

Let's Talk

alcami.com

Charleston, SC • Wilmington, NC • RTP, NC • St Louis, MO • New England • Reno, NV

CALENDAR

May 11-14, 2027 Applied Measurement Uncertainty for Testing Laboratories. Virtual. QC Training. During this workshop, the participant will be introduced to several tools and techniques that can be applied in the testing laboratory environment to efficiently and effectively create measurement uncertainty budgets which comply with ISO/IEC 17025 requirements. https://qctraininginc.com/

May 19, 2027 Estimating Measurement Uncertainty for Physical Metrologists. Port Melbourne, VIC. Australian NMI. The course provides a clear, systematic method for understanding and applying uncertainty estimation techniques in physical metrology with focus on real-world measurement and calibration examples. https://shop.measurement.gov.au/collections/physical-metrology-training

SEMINARS & WEBINARS: Photometry & Radiometry

Feb 24-25, 2027 Photometry and Radiometry. Lindfield NSW, Australia. NMI. This two-day course (9 am to 5 pm) covers the broad range of equipment and techniques used to measure colour and light output, the basic operating principles involved in radiometry, working techniques, potential problems and their solutions. https://shop.measurement.gov.au/collections/physical-metrology-training

SEMINARS & WEBINARS: Pressure

Apr 5-9, 2027 Principles of Pressure Calibration. Phoenix, AZ. Fluke Calibration. A five-day training course on the principles and practices of pressure calibration using digital pressure calibrators and piston gauges (pressure balances). The class is designed to focus on the practical considerations of pressure calibrations. https://www.fluke.com/en-us/product/calibration-tools/pressure-calibration/training-trnprsbas

Apr 12-16, 2027 Principles of Pressure Calibration Web-Based Training. Virtual. Fluke Calibration. This is a short form of the regular five-day in-person Principles of Pressure Calibration class. It is modified to be an instructor-led online class and without the hands-on exercises. It is structured for two hours per day for one week. https://www.fluke.com/en-us/product/calibration-tools/pressure-calibration/training-twb-1061

Apr 19-23, 2027 Advanced Piston Gauge Metrology. Phoenix, AZ. Fluke Calibration. A five-day training course includes complete piston gauge theory, functions, maintenance & calibration, traceability, uncertainty analysis, and more. https://www.fluke.com/en-us/product/calibration-tools/pressure-calibration/training-trnprsadv

SEMINARS & WEBINARS: Software

Feb 8-12, 2027 MET/CAL® Procedure Development Web-Based Training (Online). Fluke Calibration. Learn to create procedures with the latest version of MET/CAL, without leaving your office. The workshop is presented as a five-part, ten-hour course with each two-hour session scheduled on consecutive days, typically from 10:00 am to 12:00 pm (Noon) Pacific Standard Time (Everett, WA USA). https://www.fluke.com/

Feb 22-26, 2027 MET/TEAM® Basic Web-Based Training. Virtual. Fluke Calibration. This web-based course presents an overview of how to use MET/TEAM Test Equipment and Asset Management Software. You will learn a systematic approach to recording the information you need to manage your lab assets routinely, consistently and completely. This course is typically held from 10:00 am to 12:00 pm (Noon) Pacific Standard Time. https://www.fluke.com/

Apr 12-16, 2027 Advanced MET/CAL® Procedure Writing. Everett, WA. Fluke Calibration. A five-day procedure writing course for advanced users of MET/CAL calibrations software. https://www.fluke.com/en-us/product/fluke-software/fluke-calibration-software/training-mc-207

Apr 22 & May 13, 2027 Software Verification and Validation Part I & II. Virtual. NIST. These two 2-hour sessions on Software Verification and Validation, hosted by the NIST Office of Weights and Measures (OWM), focus on using Microsoft Excel in calibration laboratories and meeting ISO/IEC 17025:2017 software requirements. https://www.nist.gov/news-events/events/2027/04/nist-owm-software-verification-and-validation-part-i-ii-webinar-april

May 11-13, 2027 MC-203 Crystal Report Writing. Everett, WA. Fluke Calibration. https://www.fluke.com/en-us/product/fluke-software/fluke-calibration-software/training-mc-203

May 11-14, 2027 VNA Tools Training Course. Wabern, Switzerland. METAS. VNA Tools is a free software developed by METAS for measurements with the Vector Network Analyzer (VNA). The software facilitates the tasks of evaluating measurement uncertainty in compliance with the ISO-GUM and justifying metrological traceability. The three day course provides a practical and hands-on lesson with this superior and versatilesoftware. https://www.metas.admin.ch/en/vna-tools-training-course-and-vna-expert-day-may-27

May 17-21, 2027 MET/CAL® Procedure Development Web-Based Training (Online). Virtual. Fluke Calibration. Learn to create procedures with the latest version of MET/CAL, without leaving your office. The workshop is presented

as a five-part, ten-hour course with each two-hour session scheduled on consecutive days, typically from 10:00 am to 12:00 pm (Noon) Pacific Standard Time (Everett, WA USA). https://www.fluke.com/

May 24-28, 2027 MET/TEAM® Basic Web-Based Training. Virtual. Fluke Calibration. This web-based course presents an overview of how to use MET/TEAM Test Equipment and Asset Management Software. You will learn a systematic approach to recording the information you need to manage your lab assets routinely, consistently and completely. This course is typically held from 10:00 am to 12:00 pm (Noon) Pacific Standard Time. https://www.fluke.com/

SEMINARS & WEBINARS: Validation & Verification

Feb 2, 2027 Validation and Verification of Analytical Methods. Virtual. ANAB. This course provides an introduction to validation and verification of analytical methods and ISO/IEC 17025 & ISO/IEC 17020 requirements. https://anab.ansi.org/

May 26, 2027 Validation and Verification of Analytical Methods. Virtual. ANAB. This course provides an introduction to validation and verification of analytical methods and ISO/IEC 17025 & ISO/IEC 17020 requirements. https://anab.ansi.org/

SEMINARS & WEBINARS: Vibration

Apr 13-15, 2027 Fundamentals of Vibration and Shock Testing Training. TBD. ERI. This three-day Training in Fundamentals of Random Vibration and Shock Testing covers all the information required to plan, perform, and interpret the results of all types of dynamic testing. Some of the additional areas covered are fixture design, field data measurement and interpretation, evolution of test standards and HALT/HASS processes. https://equipment-reliability.com/open-courses/

Looking for Online & Independent Study Programs?

Visit: **callabmag.com/category/independent-study**





Credit: BIPM. Permission granted under Creative commons – Attribution 4.0 International – CC BY 4.0.

The 28th Meeting of the CGPM

The CGPM (General Conference on Weights and Measures) wrapped up its 28th meeting this week. The conference is where Member States, Associate Members, and International Liaison Organizations of the BIPM (Bureau International des Poids et Mesures) get together "to make decisions on scientific, institutional and financial matters related to the BIPM and its work."

Participants met at the Palais des Congrès de Versailles in France for three days where most sessions of the conference were live streamed. The first day was dominated by organizational meetings and reports, accompanied by an afternoon poster session and wrapped up with an evening reception at the Eiffel Tower. The second and third day of sessions included topics such as: Modernization of the BIPM, Metrology for New Technologies, Universal Adherence, Metrology and Digitalization, and Challenges and Future for Time Metrology.

Draft Resolutions were introduced during corresponding sessions and then voted on the final day before the close of the conference. The BIPM has information about the CGPM Resolutions 1-7 adopted during the conference on their website.

Resolution 1 – On the dotation of the International Bureau of Weights and Measures for years 2028-2031

Resolution 2 – On universal adherence to the Metre Convention

Resolution 3 – On the further digital transformation of the global metrology

Resolution 4 – On the future definition of the second

Resolution 5 – On the technical actions needed to ensure the continuity of UTC

Resolution 6 – On the definition of an international lunar reference time scale and its traceability to UTC

Resolution 7 – On the adoption of Rules of Procedure of the General Conference on Weights and Measures

Notably, three resolutions adopted (Resolutions 4, 5, & 6) concerned timekeeping. The CCTF (Consultative Committee for Time and Frequency) President, Dr. Noël Dimarcq, outlined the importance of these resolutions in his Statement, posted along with Statements made by the Director of the BIPM, Annette Koo, and President of the CIPM (International Committee for Weights and Measures), Dr. Wynand Louw, on the CGPM press page (https://www.bipm.org/en/-/2026-10-15-cgpm-2026-press-conference-announcements-and-media-resources).

ISO Launches Update to World's Most Widely Used Quality Management Standard for a New Era of Business

Geneva, Switzerland, 16 September 2026 – Today, the International Organization for Standardization (ISO) announced the launch of ISO 9001:2026, Quality management systems – Requirements (https://www.iso.org/standard/9001), the new edition of the world's leading quality management system standard.

Trusted by more than one million organizations worldwide, the updated edition of ISO 9001 reflects how business itself is changing, helping organizations strengthen resilience and deliver long-term value, meet evolving customer expectations and serve increasingly



Credit: ISO

interconnected global supply chains.

For almost four decades, ISO 9001 has provided organizations of every size and sector with a globally trusted framework for improving performance, building customer confidence and driving continual improvement.

While maintaining the proven principles that have made it the international benchmark for quality management, the 2026 edition responds to an increasingly complex operating environment, where organizations must balance resilience with innovation and adapt quickly to changing markets and technologies.

ISO Secretary-General Sergio Mujica said ISO 9001, known as the gold standard in quality management, has helped organizations globally to build trust and deliver consistent value to customers.

"I am delighted to announce today's publication of the new edition of ISO 9001, a milestone that reflects both the enduring strength of this International Standard and its ability to evolve alongside the needs of organizations worldwide," Mr Mujica said.

"Today's business environment demands even greater agility, and this updated edition ensures the world's most widely used quality management standard continues to provide organizations with an internationally trusted framework to navigate change with confidence."

The new edition introduces targeted updates to improve clarity, usability and relevance while building on the familiar framework organizations already use. It places greater emphasis on leadership, a culture of quality and ethical behavior, while providing greater clarity on the consideration of risks and opportunities to support better strategic decision-making. A new section also helps users better understand the intent of the requirements and apply them consistently.

The standard also adopts the latest Harmonized Structure for ISO management system standards, making it easier to integrate ISO 9001 with other management system standards.

Sam Somerville, Chair of ISO/TC 176 Subcommittee 2 and Convenor of the international working group that led the revision of ISO 9001, said the publication marks the culmination of years of international collaboration and demonstrates the strength of the standards development process.

Free Whitepaper: Reducing Uncertainty in Cable Testing Through Intelligent Automation

As cable assemblies become more complex and quality requirements continue to increase, traditional manual validation methods are reaching their practical limits. Variations in test setup, operator-dependent procedures, and inconsistent documentation can introduce uncertainty into the testing process while making repeatability and traceability more difficult to achieve.

Intelligent automation is changing the way organizations approach cable testing and verification. Modern automated test systems help standardize procedures, reduce opportunities for human error, improve measurement consistency, and provide comprehensive digital records of test results. By combining advanced instrumentation with automated workflows, organizations can strengthen quality assurance efforts while improving confidence in product performance and compliance.

In this whitepaper, Vitrek examines the challenges associated with manual cable validation, the benefits of intelligent automation, and the technologies enabling more reliable, repeatable, and traceable testing. Learn how today's automated cable test solutions are helping manufacturers, calibration laboratories, and quality professionals improve efficiency while maintaining the highest standards of measurement integrity.

Download the whitepaper to explore the future of cable testing and validation at **https://visit.vitrek.com/2606CALADV**



Download and learn:

- The limitations of manual cable validation
- How automation improves repeatability and consistency
- Methods for enhancing test traceability and documentation
- Best practices for reducing operator-dependent variability
- Key considerations when selecting an automated cable test solution

VITREK

(815) 838-0005 • Vitrek.com

"Bringing together experts across industries, sectors and countries enabled us to challenge ideas, build consensus and develop a standard that reflects the different realities organizations face today," Ms Somerville said.

"It's incredibly rewarding to see this work come to fruition. We hope organizations around the world will use ISO 9001:2026 to build confidence and create lasting value for the people and communities they serve."

Susan Taylor Martin, Chief Executive, BSI said "Millions of companies around the world look to ISO 9001 to ensure their operations and activities have quality at the core. This essential standard of best practice helps businesses both improve their productivity and power their growth. In our interconnected world with complex global supply chains, a consistent approach that improves quality has never been more critical. The latest update to ISO 9001 is a testament to continued worldwide collaboration, ensuring the standard remains relevant and fit for purpose. We're proud that BSI has helped drive quality management from a British standard, almost 40 years ago, into the world's most widely used framework for quality we see today."

Organizations already using ISO 9001 will find the new edition represents a natural evolution, helping them build on existing management systems while ensuring they remain relevant, effective and aligned with today's operating environment. ISO 9001 will also be part of ISO's first offering of digitally enhanced content – to be available from 1 October 2026.

ISO 9001 is used across every sector of the global economy, supporting organizations ranging from manufacturers and technology companies to hospitals, universities, governments, financial institutions, social enterprises and small businesses. Its broad adoption has made it one of the world's most widely recognized frameworks for quality management and a common language for organizations operating across international markets.

The publication of ISO 9001:2026 follows extensive international collaboration through ISO's global network of national standards bodies, bringing together experts from around the world to develop a consensus-based framework that reflects evolving business needs and international best practice. More information about ISO: www.iso.org.

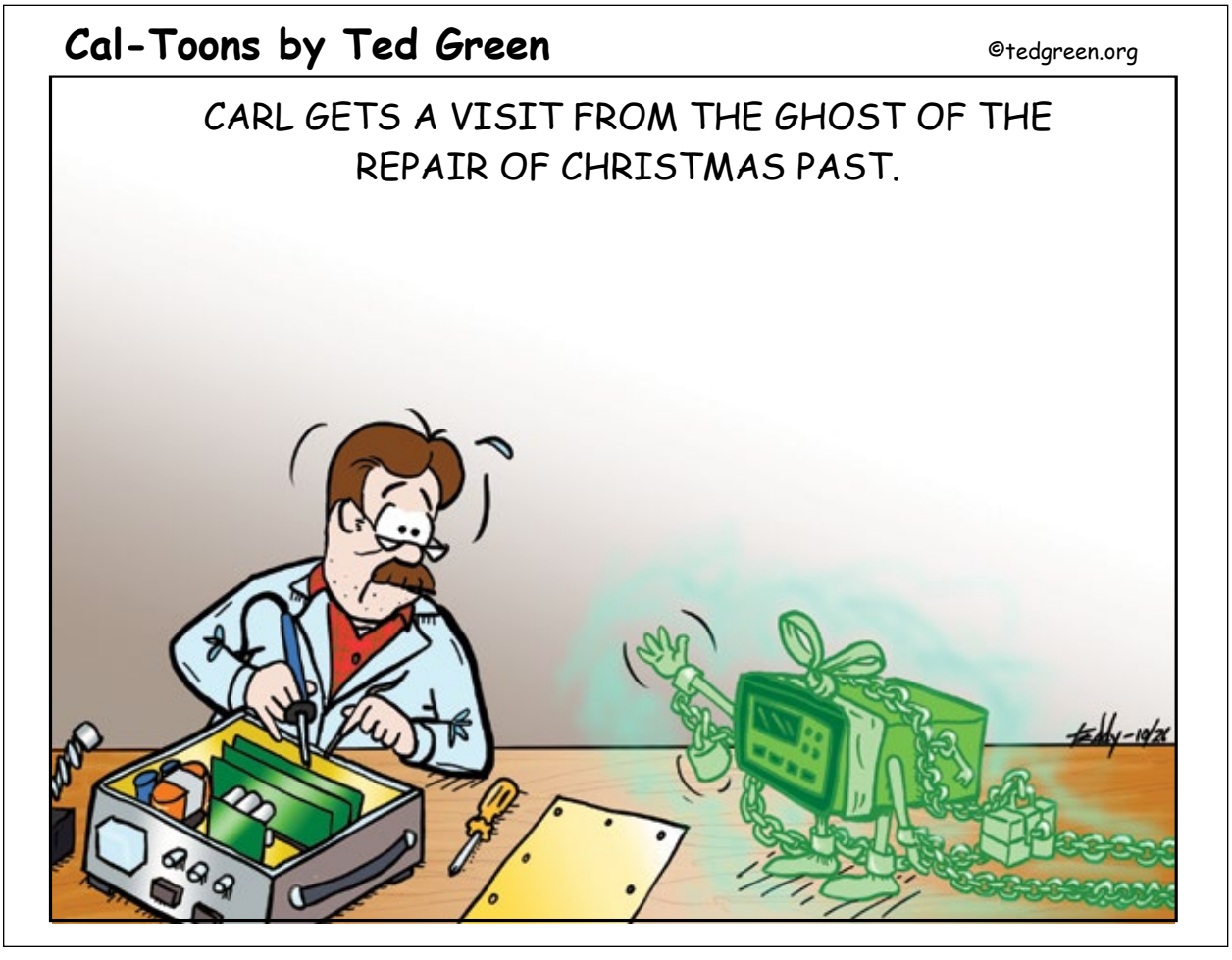

MODEL 1220

"Two-Pressure" Humidity Generation System



FEATURES

- **Traceable to SI**
- **0.6% of Reading RH Uncertainty**
- **Test Chamber 8" x 8" x 8"**
- **Flow Capability of 20 L/min**
- **Multi-point Touch Display**
- **Window Door Option Available**
- **No Refrigerants - Thermoelectric Cooling/Heating**
- **Based on NIST Proven "Two-Pressure" Principle**
- **Automatically Applies Enhancement Factors**
- **HumiCalc® with Uncertainty Mathematical Engine**
- **Generate: RH, DP, FP, PPM, Multi-point Profiles**
- **ControLog® Embedded Automation Software**

Scan For More Info

1966 60TH 2026 ANNIVERSARY

Made In USA

AMERICA 250

MODEL 3920

Low Humidity Generation System



FEATURES

- **Traceable to SI**
- **Multi-point Touch Display**
- **Calculated Real-Time Uncertainty**
- **High Flow Capability of 10 L/min**
- **Diaphragm-sealed Control Valves**
- **Calculated Water Capacity/Usage**
- **VCR® Metal Gasket Face Seal Fittings**
- **Ability to Operate Using External Computer**
- **Based on NIST Proven "Two-Pressure" Principle**
- **HumiCalc® with Uncertainty Mathematical Engine**
- **Generate: RH, DP, FP, PPM, Multi-point Profiles**
- **ControLog® Embedded Automation Software**

Scan For More Info

Thunder Calibration Services

Accredited Humidity Calibration Services

- Offering calibration support for a wide variety of humidity, frost/dew point, temperature, and pressure devices produced by other manufacturers.
- Onsite calibration service available for Models 1200, 1220, 2500 & 2900 Humidity Generation Systems.
- Expedite calibration service available

Disclaimer: Use of the NVLAP symbol does not imply product certification, approval, or endorsement by NVLAP, NIST, or any agency of the U.S. Government.

NVLAP® CALIBRATION
NVLAP Lab Code 200582-0

ilac-MRA

Scan the QR Code for Thunder's full scope.

Humidity Generation and Calibration Equipment

THUNDER SCIENTIFIC® CORPORATION The Humidity Source

623 WYOMING BLVD. S.E.
ALBUQUERQUE, NM 87123-3198
sales@thunderscientific.com

(505) 265-8701 ✓ (800) 872-7728

✓ www.thunderscientific.com ✓

DMMs and Calibrators: A Practical Introduction to DC/LF Electrical Calibration

Jack Somppi
Test and Measurement Consulting

Jesse Morse
Morse Metrology

Lord Kelvin, a noted nineteenth century engineer, mathematician, and physicist, is famously known for his observation, which still sets the tone for metrology today: "When we can express what we are speaking about in numbers, we begin to know something about it…" For a beginning calibration technician, that sentence is more than a quotation. It is a warning that the number displayed on a digital multimeter is not automatically knowledge. It becomes knowledge only when person observing it understands how the instrument creates that number, what its specifications allow, and whether the calibration process used to calibrate it gives us enough confidence to use the result.

This article is meant to enlighten the person new to calibration about the science behind the trade of calibration, and some of the foundational elements of electrical calibration. The discussion will be focused on examples centered around calibration of measurements, specifically the digital multimeter, or DMM.

A DMM From the Inside, Out

Having a rudimentary knowledge of the instrument one is calibrating is important for several reasons, which is discussed in the following paragraphs for digital multimeters.

Digital multimeters are among the most common instruments calibrated in an electrical laboratory. Because they are so common, they are sometimes underestimated. A handheld DMM, a bench DMM, and an 8.5-digit laboratory DMM may all measure and display volts, ohms and amps, but their measurement capabilities vary widely in resolution and accuracy. The practical work of calibration begins with that distinction. Just as the DMM must be matched to the user's measurement need, the calibration process must be set up to match the needs of the DMM.

Of the three groups of DMMs mentioned, handheld DMMs are usually the most versatile and prolific of the family. It may include voltage, current and resistance functions, but may also include other functions such as frequency, continuity, diode test, temperature, capacitance, peak hold or even waveform capture. This versatility is useful in the field, but it comes with limits. Handheld meters commonly offer 3.5 or 4.5 digits of resolution and are usually less accurate than bench or laboratory instruments. Their additional functions can also complicate calibration, because a laboratory must decide which capabilities are essential to verify, what standards are needed and how to test them logically.

Bench and system DMMs occupy the middle ground. They are generally more accurate than handheld meters and often provide 4.5 to 6.5 digits of resolution. They may also support automated control via the IEEE or other remote-control interfaces. Many are line-operated and designed for repeatable use in test systems. Laboratory DMMs represent the high end, commonly offering 6.5 to 8.5 digits of resolution with a smaller set of core electrical functions: DC voltage, AC voltage, DC current, AC current and resistance. This reduction in apparent versatility is not a weakness. It reflects a design priority, i.e. better measurement performance in fewer functions.

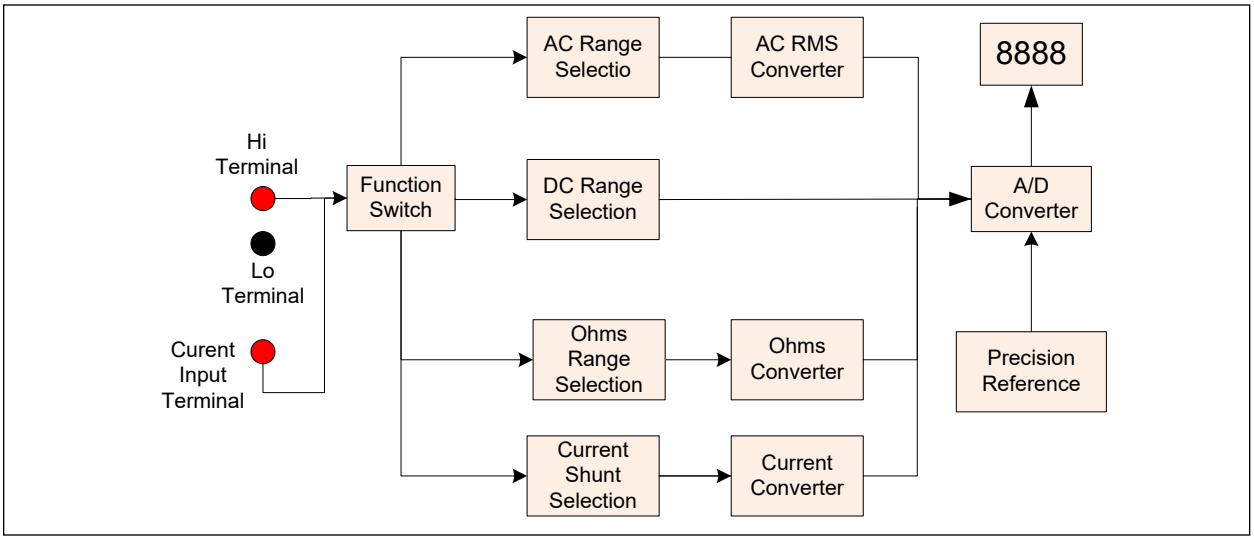

Diagram 1. Block Diagram of a Typical DMM.

DMM Structure

New entrants in this field need to understand how DMMs work. This understanding is essential to ensure appropriate working of its internal system.

The measurement process for a DMM begins with the electrical signal to be measured by being applied to the device through either front or rear input terminals, as shown in the Block Diagram 1. This signal is routed to the appropriate range selection switch(es) where it is adjusted to an input signal level suitable for processing by the meter.

Then, the signal is routed to one of several signal converters, depending on the type of signal being measured. For example, the meter's Ohms Converter converts a resistance value into a DC voltage signal that the multimeter can interpret. Current measurements are processed by the Current Converter, which in a similar way translates current into a voltage signal. In the case of AC signals, the root mean square (RMS) Converter calculates the RMS value of the AC signal and provides a DC output equivalence of the AC signal input.

The now conditioned signal finally goes into an Analog-to-Digital Converter (ADC) where the analog signal is converted into a digital representation of the input. This digital data is then processed by the DMM's microprocessor or microcontroller, scaled to the proper value and function per the DMM's measurement settings to present a readable value on the display. This completes the measurement process.

Having a rudimentary knowledge of the instrument one is calibrating is important. Here are some tips to keep in mind when calibrating a DMM.

1. Determine the "Basic Range" of the meter. It is usually, or should be, the first measurement required in the calibration procedure. If that range is out-of-tolerance, then most likely all other reading will be off as well. However, if "as found data" is being recorded, do not adjust this reading until after all data is recorded for all other functions.
2. If the current function appears to not be working at all, but the DC basic voltage function is, the current fuse might be blown and only need replacing. Then the calibration procedure may proceed.

Calibration Procedures

A good calibration procedure should verify the instrument over the functions and ranges that define its use, follow a logical order and generate results that can be repeated by different technicians. Manufacturer's procedures typically provide a list of suggested equipment suitable for the calibration task, a step-by-step procedure to apply suggested input parameters and values and required measurement parameter value limits.

When an approved calibration procedure is not available, a technician must be very aware of how the instrument to be calibrated is structured and its specifications for each function and range.

DMM Specifications

One of the first lessons for a new calibration technician is to understand that resolution is not the same thing as accuracy, nor does it guarantee accuracy. Resolution tells us how small a change an instrument can display. Accuracy tells us how close the measurement is expected to be to the true value under stated conditions. A 6.5-digit display can still be wrong if the measurement circuit, environment, connection method or calibration status is not controlled according to its stated performance conditions. An instrument's specifications must therefore be read carefully and understood. Specifications may include percent of reading, percent of range, least significant digit counts (or resolution), minimum measurement value floors, time since calibration, temperature conditions and special notes. More capable instruments often have more complex specifications, not simpler ones.

As a useful example, assume a 3.5-digit DMM is measuring 5 V on its 6.000 V range, which has 1 mV resolution. For this meter the specification for that range is:

Accuracy = ± (0.09% of reading plus 2 counts)

Thus, when measuring 5 V on this range the accuracy is calculated:

Accuracy = ± (0.0009 * 5V + (2*0.001V))

= 0.0045V + 0.002V

= 4.5 mV + 2 mV

= ± 6.5 mV @ 5 V on the 6 volt range

Because the resolution of the meter is 1 mV, the ±0.0065 V would typically be rounded to ±0.007 V as displayed. The acceptable indication for a 5.000 V input, in this case, would lie between 4.993 V to 5.007 V. This simple calculation is fundamental. Without it, pass/fail limits become guesses dressed up as numbers.

It must be remembered that the resulting accuracy of <u>any reading</u> must be calculated. That is, if one measures 1 V on the 5 V range, the accuracy will be

Accuracy at 1V = ± (0.009*1 V + (0.001*1))

= ± (0.009 V + (0.001 mV*1 V)

= ± (0.009 V + 0.001)

= ± 0.010 V

= ± 10 mV

= ± 10 mV @ 1 V on the 6 volt range

So, the acceptable indication for a 1.000 V input in this case would lie between 4.990 V to 5.010 V.

The second part of this specification, (+2 counts) becomes a more significant contributor to the total accuracy measurement specification as the reading value becomes less and less of the portion within the full-scale range.

Calibrator Specification

The same thinking applies when selecting a calibrator. An electrical calibrator is a precision source, not merely a power supply. It may generate millivolts to kilovolts, DC and AC voltage, current, resistance, capacitance, inductance, temperature simulation, frequency or oscilloscope calibration signals. But a calibrator also has specifications, limits and operating conditions. Its output accuracy specification must be small enough relative to the DMM measurement requirement being tested to not significantly add more error to the unit under test's actual error being tested during the calibration process. A common professional practice is to use a standard whose specification is at least four times better than the unit under test (4:1 TAR) at the <u>actual test point</u>. This is often discussed in terms of test accuracy ratio (TAR), test specification ratio (TSR), or test uncertainty ratio (TUR). In practice, the most complete view is obtained by considering the overall measurement uncertainty. This process is a thorough analysis of multiple repeated tests at each point being calibrated which is not discussed in this article.

To determine if our calibrator is sufficient to calibrate the DDM under test, we will review the example above. If the DMM's specification at 5 V is ±6.5 mV, a 4:1 practice would require the calibrator to be better than about ±1.625 mV. If the calibrator's one-year absolute specification at 5 VDC is ± (0.005% of output plus 50 µV), its error contribution is about ±300 uV. So, the ratio between the DMM

and the calibrator is approximately 21.7:1, which is comfortably stronger than the common 4:1 rule. The important point is not the ratio itself; it is the discipline of doing the comparison at the test point, for the function and range actually being verified.

This is why the manufacturer's service or calibration manual remains an essential document. It normally identifies the recommended performance tests, test points and pass/fail limits needed to verify the DMM against its published specifications. Users may add points for their own applications, but they should understand why those points matter. Calibration is not the random application of accurate signals. It is a structured demonstration that the instrument remains suitable for its intended use.

External Influencers That Affect a Measurement Result

Every measurement made is influenced by external forces not usually described in a calibration procedure. The calibration technician must be aware of these forces and how they influence the resulting measurement reading.

Interconnection Cables:

A common influencer can be something as ordinary as a simple test lead. The connection between a calibrator and a DMM is part of the measurement system. Cables and connectors can introduce several sources of potential error. The more evident ones found in a common twisted-pair dual banana test lead, listed below, and depicted in Diagram 2 are:

- contact resistance,
- thermoelectric voltages.
- lead resistance,
- inductance,
- capacitance,
- susceptibility to electromagnetic interference, and
- leakage, due to inter-lead resistance.

It should be noted that some of these influencers are in series with the desired signal, and some are parallel. Also, these influencers do not affect a measurement the same way in every function being measured. The traceability chain of a measurement can be violated if the signal arriving at the DMM's input terminals is not the as the signal at the calibrating standard's output terminals.

Thermal EMFs

Effects of thermal electromotive forces (EMFs) at the connection terminals are particularly important to understand. They are often the most common source of error in low-level DC voltage measurements. A thermal EMF is generated when dissimilar metals are connected, and their junction points are at different physical temperatures. This is called the Seebeck effect, which is measured in voltage per kelvin (V/K) referenced to Platinum. A metal with high Seebeck coefficient creates more thermoelectric energy than one with a low coefficient.

The voltage produced depends on the materials and the temperature difference. It is serious concern as test-lead connection temperatures can be significantly different at the terminals of the DMM and the terminals of the calibrator. The conversion of (V/K) to (V/°C) is beyond the scope of this writing.

However, as shown in Table 1, the conversion has been made to show an example of copper-to-copper junctions which generate less than 0.2 microvolts per degree Celsius (converted from μV/K), while

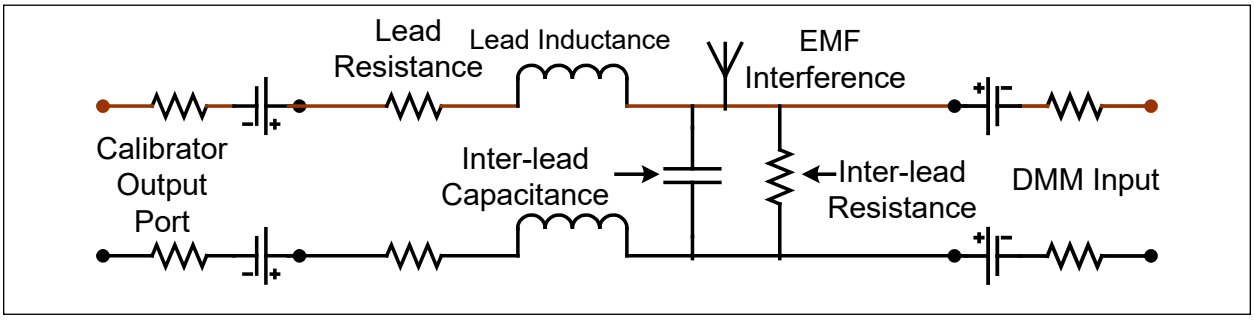

Diagram 2. Schematic of a dual twisted-pair test lead.

Thermal EMF created by connecting the metals in the table to copper terminals, expressed in µV per one-degree Celsius difference across the junction.		
Paired Test Lead Connection Materials	**Seebeck Coefficient (Q_{ab})**	
Copper-Copper	<0.2 µV/K	Seebeck Coefficients can vary from <0.2 µV to ~1000 µV per degree Celsius (or Kelvin) of temperature difference between each connection material.
Copper-Gold	0.3 µV/K	
Copper-Silver	0.3 µV/K	
Copper-Lead/Tin	1-3 µV/K	
Copper-Silicon	400 µV/K	
Copper-Kovar	40-75 µV/K	
Copper-Copper Oxide	1000 µV/K	
Cadmium-Tin Solder	0.2 µV/K	
Tin-Lead Solder	5 µV/K	

Table 1. Seebeck Coefficients for Various Pairs of Connection Metals.

any copper oxide (tarnish) on these connectors can be dramatically worse, adding up to 1.0 millivolt per degree Celsius. This is why clean connections matter. A connector that is electrically conductive can still be a poor choice for microvolt-level work if it creates thermal offsets.

To illustrate this effect, the practical demonstration is memorable. Two different shorting devices are used for this demonstration. A proper low-thermal short (Figure 1) is first used to zero the DMM. That short is immediately replaced by the one shown on the right consisting of different metals at a temperature slightly different from the temperature of the low thermal short.

The measurements are displayed on the DMM in Figure 2 (on the next page) for each shorting device. On the left, the DMM shows a voltage measurement of one digit (or .01 microvolts). On the right the DMM shows the measurement of the other zero ohm short. It shows 1.79 microvolts, which is due to the EMFs caused by the materials at the connection terminals and temperature differences at these terminals. The second device may be an "ohmic short," but definitely not a thermal EMF zero. Note that if the second device were used to zero the DMM, a "hidden" systematic error of 1.79 µV has been created and will affect every measurement made by that DMM.

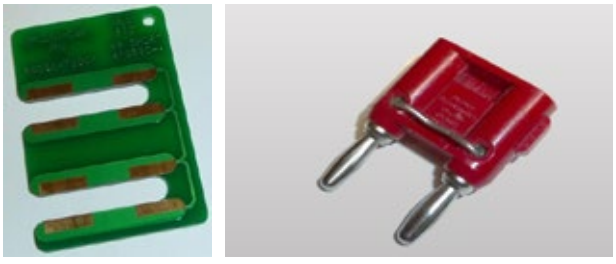

Figure 1. Common Shorting Devices for Zeroing DMMs.

Even a small clean copper wire, by contrast, can perform surprisingly well because it has low thermal mass and a low Seebeck coefficient relative to the terminals. The lesson is simple: low resistance alone is not enough. For sensitive measurements, thermal behavior is part of the circuit.

Here are some good practice tips for making critical measurements:

1. Check the "Zero" of the measurement devices before making critical measurements using a clean copper or gold-flashed copper short with small thermal mass.
2. Avoid oxidized connections.
3. Use low-thermal construction techniques, such as crimped copper lugs or suitable low-thermal solder.



Figure 2. Thermal EMF Voltages measured on two different zero ohm connection modules

4. Keep ambient temperature stable, protect terminals from sunlight and exhaust fans, and cover sensitive junctions when necessary.

These actions may seem small, but at the microvolt level they are often the difference between a stable result and a misleading one.

Guarding

Guarding is another concept that beginners should learn early. High precision instruments may provide a "Guard" terminal, which is connected to an internal shield surrounding sensitive analog circuitry. The guard is used to control *leakage* and *common-mode* related errors by routing unwanted currents away from the measurement path. The detailed configuration depends on the source, measurement instrument, and application. But the general discipline is clear: do not leave the guard floating. Connect guard deliberately, normally near output low or input low potential, and avoid creating unintended guard currents in the measurement leads. As with test leads, the guard is not an accessory afterthought; it is part of the measurement architecture.

Automation

Modern calibration increasingly adds automation to this architecture. Remote operation, software calibration, automated procedures and integrated measurement systems can improve consistency and efficiency. Automation, however, does not remove the need for understanding. It can execute a poor procedure as faithfully as a good one. The value of automation is greatest when the underlying procedure is technically sound, the standards are properly selected, the connections are appropriate and the uncertainty model reflects the actual measurement.

Summary

For new calibration personnel, the central message is that a DMM reading is the end of a chain, not the beginning. The chain includes the instrument design, the selected function and range, the specification, the calibrator, the procedure, the cables, the thermal environment, the guard configuration and the certificate that records the evidence. Learning to see that chain is the transition from using a meter to practicing metrology. Once that transition begins, Kelvin's words become practical: numbers matter, but only when we understand what they represent and how much confidence they deserve.

Jack Somppi (jack.somppi@testandmeasurement.consulting), Test and Measurement Consulting.

Jesse Morse (jesse@j-morse.com), Morse Metrology, MSC Woodington Award Recipient - 2009.

3D Printing in the Modern Calibration Lab

Tyler Pazera
Certified Calibration Service LLC

Introduction

The modern calibration lab has access, through the internet, to an almost intimidating abundance of metrological resources, though many tools aimed at more specific applications can still be hard to find or cost prohibitive, especially when certification is necessary. In-house custom fabrication can achieve excellent results but necessitates expertise and time to achieve acceptable precision, not to mention expensive tools and materials. 3D printing presents an appealing alternative. Though it requires a significant upfront investment but ultimately provides novel opportunities to quickly and cheaply develop calibration capabilities with high levels of precision and customization. A Helmholtz coil serves as an illustrative example of what can be achieved with a rudimentary familiarity and setup for 3D printing.

3D Printing Fundamentals

For plastic parts, the two most popular methods of 3D printing are stereolithography (SLA) and fused filament fabrication (FFF). SLA printing creates objects layer-by-layer from a liquid resin. For each layer, the resin is uniformly spread and cured into a specific pattern using UV light; the pattern is usually created using a high-resolution LCD, but steerable lasers can also be used. Once the layer is cured, the print is shifted vertically by a controllable increment so another layer can be printed on top of it. Once completed, the print is washed to remove residual uncured resin. SLA printing offers the ability to print in very high resolution, with a layer height of 0.025 mm commonly achievable, but the overall print volume is limited to the size of the LCD which generally doesn't exceed 200 mm in width and 120 mm in depth for most models.

FFF printing similarly creates objects layer-by-layer but uses plastic filament instead of liquid resin. The filament is fed into a heated extruder nozzle which deposits a thin stream of material onto a build plate. The extruder or build plate are then moved in two dimensions while the filament is extruded to create a specific pattern. Once the layer is complete the extruder or build plate is shifted vertically by a controllable increment and another layer is printed on top of the existing one. Because the filament requires another layer beneath it to adhere to, the geometry and orientation of the object being printed is limited; vertical overhangs can generally be handled by printing supports underneath them, but these can affect final quality and need to be manually removed once the print is complete.

Both methods have their unique advantages, but for most laboratory purposes the FFF printer provides the most value. An FFF printer can, with some hardware upgrades and optimizations, print a layer height as small as 0.05 mm, but works most effectively at a layer height of around 0.2 mm which is sufficient for most applications. Overall accuracy varies by printer, and SLA printing inherently exceeds FFF performance in this regard, but through proper print preparation, filament handling, and printer calibration, a tolerance of around ±0.09 mm [1, 2] can be achieved. A typical FFF printer also has a much larger print volume than an SLA printer, with many capable of printing at 300 mm in three dimensions, allowing for the creation of a wider variety of fixtures and tools. The real value of a 3D printer, though, is its ability to emulate more traditional fabrication methods at a lower cost, and FFF printers far exceed SLA printers in this regard, both in terms of initial investment and material cost.

After cost, the next biggest challenge in fully utilizing 3D printing is on the software side. Commercially available printers come with free programs that allow for comprehensive configuration of printer parameters and loading 3D model files to ultimately print, but the model files themselves

need to be sourced elsewhere. There are several large online repositories of free model files that prove incredibly useful. When a new part or fixture or accessory is needed, someone else has likely encountered the same obstacle and already done the hard work of creating a model and uploading it. There are also parametric models which allow for some amount of straightforward customization using tools like OpenSCAD. If the build is truly unique, though, a computer-aided design (CAD) program is necessary. There are several popular options, like AutoCAD or Solidworks, which provide extensive functionality at exorbitant prices, but there are also open-source and free CAD software that are usually more than sufficient for most non-commercial lab needs. OnShape is a free browser-based CAD software that provides decent functionality and has many useful online training resources which also serve to familiarize the user with fundamental CAD concepts.

3D Printing in the Lab

When our lab — ISO/IEC accredited by ANAB — at Certified Calibration Service in Tukwila, WA, first acquired a 3D printer, we used it to print replacement parts or fixtures from pre-existing models found online for basic quality of life improvements. For example, we were able to replace the missing kickstand for the Fluke thermometer and print multiple small spools for disorganized thermocouple wire. We printed a more stable and versatile stand for a USB microscope. After getting more familiar with the intricacies of our setup, we moved on to printing fully custom models. We created custom inserts to better seal our humidity probes into the humidity chamber and salt standard jars for more stable readings. We designed custom pelican case inserts for our field calibration weights and gage blocks which provide durable protection and organization for our expensive standards. We also printed a custom stand for our daylight source to allow for better repeatability when calibrating light meters.

There are intrinsic limitations to what can be accomplished with 3D printing, the most obvious of which is the material available to print with. There are many different varieties of plastic filaments which offer different advantages like temperature resistance or flexibility, but they are all still plastic. For full calibration test setups, then, it is necessary to integrate 3D printed parts with other materials and equipment. The main benefit of 3D printing here is to precisely fabricate critical components of setups that are difficult or expensive to find commercially. The possible applications are numerous, from dimensional tooling to desktop wind tunnels for calibrating flow meters. A Helmholtz coil is a great and accessible example of how 3D printing can help create new calibration capabilities for a metrology lab.

Helmholtz Coil

A Helmholtz coil consists of two identical coils of wire, acting as electromagnets, positioned at a precise distance from each other along the same axis. When a constant current is sent through the coils in the same direction, a uniform magnetic field is produced with the maximum field uniformity and intensity at the center of the two coils. When the distance between the two coils is set to be equal to the radius of each coil, the magnetic field produced is described by the following equation:

$$B = \left(\frac{4}{5}\right)^{3/2} \frac{\mu_0 n I}{R}$$

where μ_0 is the permeability of free space, n is the number of turns per coil, R is the radius of the coils, and I is the current. When the current is described in Amps, the resulting magnetic field is in units of Tesla.

Helmholtz coils have a long history and wide array of applications. In the biological sciences and medicine, Helmholtz coils are used in studying the effects of magnetism on different life processes [3] and are integral components of magnetic

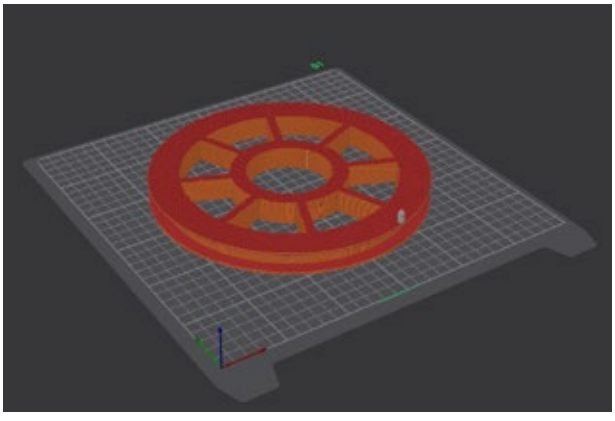

Figure 1. Helmholtz coil model in 3D printer software.

resonance imaging (MRI) machines. In aerospace, Helmholtz coils can be used to test instrumentation or to cancel out the earth's magnetic field to create highly controlled environments for other sensitive experimentation. NASA's Goddard Space Flight Center in Maryland houses three Helmholtz coils, with the largest having a diameter of 42 feet [4]. Helmholtz coils are integral in the research of hyper-sensitive atomic magnetometers which have applications in particle physics [5]. In consumer technology and industrial applications, Helmholtz coils can be used to calibrate magnetometers [6]; in smart phones, the magnetometer usually takes the form of a Hall effect sensor [7] which acts as a compass to enable their use as navigational devices. In industry more broadly, there is a wide array of applications including environmental exposure measurement and part inspection in the field. These are the instruments our lab will initially focus on calibrating with the 3D printed Helmholtz coil, so we need to accommodate a wide variety of sizes and measurement ranges.

Trade-off Considerations

When designing a Helmholtz coil calibration setup, there are several trade-offs to consider. From the magnetism equation above, there are three parameters that can be controlled: the radius and number of coil turns, which are fixed, and the current which is variable. The first and most critical one to determine is the radius of the coil itself. The magnetic field strength varies inversely with the coil radius, meaning a larger coil will produce a smaller field. To achieve maximum field uniformity, though, the two coils need to be separated by a distance equal to the radius, so the usable test area scales linearly with the coil size. For calibration purposes, then, the main limiting factor to consider for radius is the size of the instrument to be calibrated. Coil radius also determines the overall length of wire ultimately needed, so it can become a significant cost contribution if a strong field is needed at a large radius. Once fixed, the other parameters are easier to choose.



Figure 2. Fully printed Helmholtz coil setup with power supply and digital magnetometer.

The current and number of turns both vary linearly with the magnetic field strength so can be considered in tandem. The main limitations here are the maximum field strength and precision required. Many commercial lab DC power supplies cannot output more than 10 Amps, with most limited to five. The magnetic field can be strengthened by adding additional coil turns, but the additional load on the power supply must be accounted for since the supply is limited by overall power output as well. Electrical resistance decreases as wire thickness increases, so a limited power supply can be compensated for with lower gauge wire if more magnetic field strength is needed. Thermal dissipation through the wire with higher drive currents must also be accounted for, especially with a 3D printed coil holder as most common filaments have a glass transition temperature around 60° C [8]. Any deformation to the coil holders will permanently alter the magnetic field uniformity and render the coil useless. Some filaments, like ABS or polycarbonate, offer more temperature resistance but require some more finesse when printing.

3D Printer Precision and Accuracy

To achieve a uniform and predictable magnetic field in the first place, the coil holders must be accurate, identical and positioned at a precise distance from each other, areas that a 3D printer excels in. As touched on above, an FFF printer's resolution is fundamentally limited by the motor step resolution and nozzle size; the nozzle diameter determines the minimum width of material deposited and the motor step resolution determines the finest curvature printable. For all commercially available printers, the motor step size is much smaller than the nozzle diameter, so it can be disregarded for most precision concerns. The ultimate dimensional profile of deposited filament is determined by a complex relation between the nozzle diameter, filament flow rate, programmed layer height and motor speed. Thankfully for the user, a "slicer" software is included with the printer that handles all these interactions behind the scenes so that only a limited number of parameters -- like layer height -- need to be selected. A Slicer takes a 3D model file as an input and, using the fixed and programmable parameters for the hardware and filament type, generates a full set of instructions for the printer in the form of a "G-Code" file. With the intricate hardware control performed rigorously through software, the print precision is innately highly repeatable. The biggest variable, and one that is often overlooked, is filament quality. The printer hardware and slicer software assume a configurable but fixed filament diameter, so any significant variation along the spool will result in significant variation in the final print. In addition to variations due to manufacturing, filament storage must be considered as well. Plastic filaments absorb environmental moisture, and a filament with a high moisture content will not melt as uniformly as one with a low moisture content. This can result in print inconsistencies that are difficult to control, but it can be avoided with proper filament storage and occasional oven drying as necessary.

To ensure dimensional accuracy, calibration steps are necessary. The most basic form of calibration involves printing a model of known dimensions and then measuring output. This input model can be as simple as a small cube, but it is good practice to characterize more complicated geometries as these can reveal errors that only result from specific hardware interactions. It's also good practice to calibrate over the print volume you expect to use, as there might be stepper motor travel errors in only specific ranges. In the case of the Helmholtz coil, the main concerns are the roundness and accuracy of the diameter and the accuracy of the coil separation. Because the parameters for adjustment vary across printers, the actual calibration procedure is not rigorous; modifying the input model based on measurements is more than sufficient, though a few iterations might be required.

The uncertainty of the resulting magnetic field can be calculated using the more detailed Helmholtz coil magnetic field equation which does not assume the spacing $\underline{S}$ is equivalent to the coil radius:

$$B = \frac{\mu_0 n I R^2}{\left(R^2 + \frac{S^2}{4}\right)^{\frac{3}{2}}}$$

A calibrated 3D print can easily achieve an accuracy of less than ±1 mm which results in a contribution of ±0.4% and ±0.6% magnetic field for the coil radius and spacing respectively.

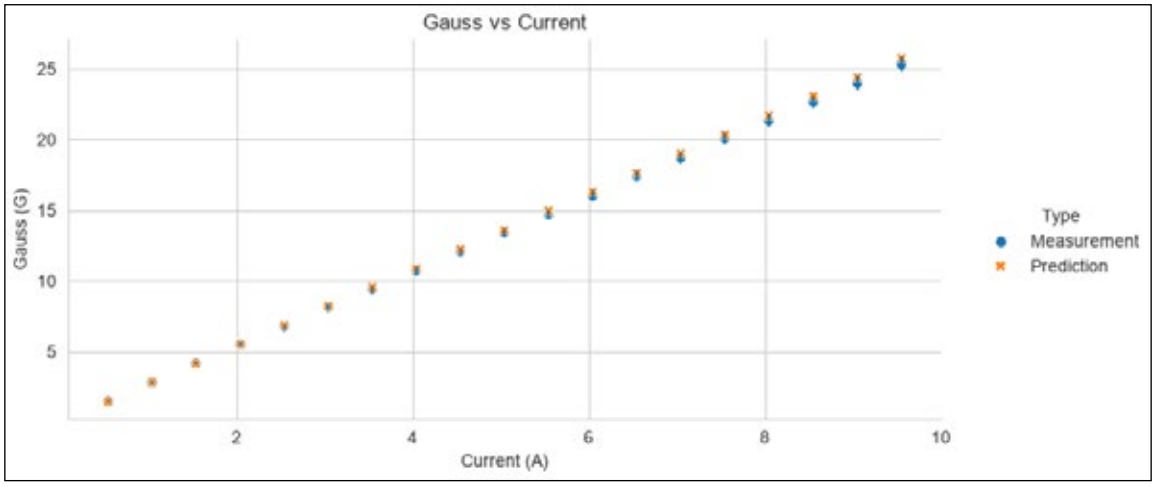

Figure 3. Measured magnetic field vs. predicted for printed Helmholtz coil.

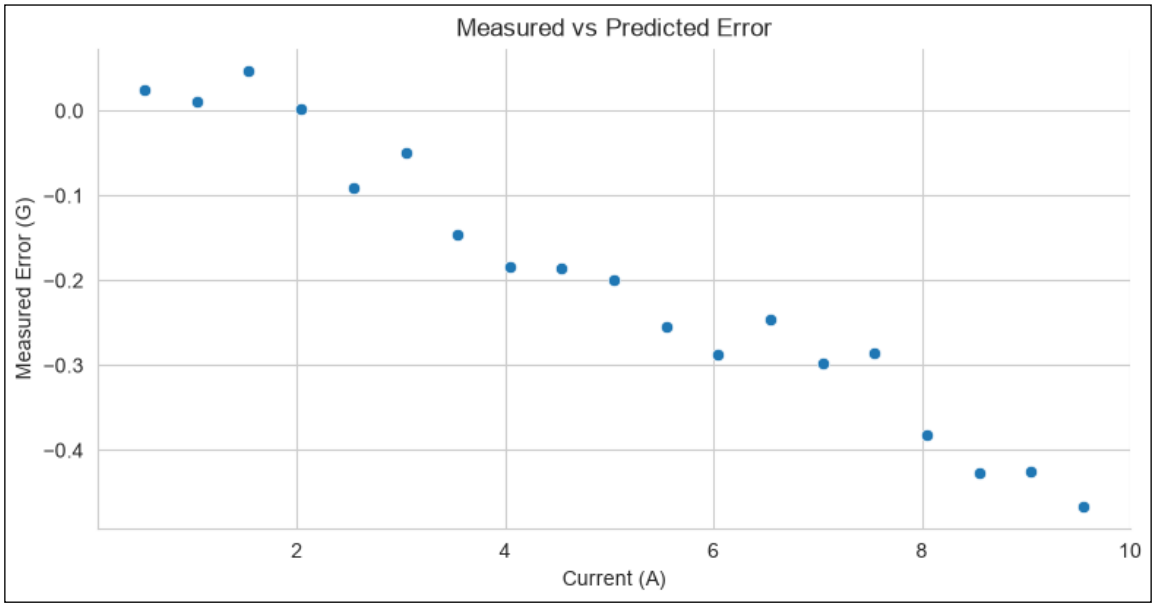

Figure 4. Error between measured and predicted magnetic field.

With a stable and calibrated lab power supply, an overall uncertainty of less than ±2% is easily achievable. Using a factory calibrated digital magnetometer the performance of the printed Helmholtz coil can be directly verified against the predicted performance. As can be seen in the following graphs (Figures 3 & 4), the measured magnetic field tracks the predicted value very well, not exceeding 2% error for up to 25 Gauss.

Conclusion

This Helmholtz coil project illustrates how 3D printing is not only useful for creating small parts or custom fixtures, but that it can create high precision measurement capabilities that are otherwise difficult to obtain. Having the ability to build these setups in-house not only allows for greater customization, ease of maintenance, and redundancy, it encourages the metrologist to become more intimately familiar

with the underlying principles and trade-offs of the calibration system. This knowledge can help identify other potential capabilities or reveal existing deficiencies in the pursuit of continual improvement.

References

[1] E. O. B. S. Rachael Wratkowski, "A Characterization of the Repeatability and Performance of Stratasys Fused Deposition Modeling (FDM) Systems," Stratasys, 2021.

[2] J. Rui, "Bambu Lab Community Forum," 27 March 2025. [Online]. Available: https://forum.bambulab.com/t/understanding-dimensional-accuracy-in-3d-printing/156219. [Accessed 20 July 2026].

[3] A. Bahrami, L. Y. Tanaka, R. C. Massucatto, F. R. M. Laurindo and C. D. Aiello, "Automated 1D Helmholtz coil design for cell biology: Weak magnetic fields alter cytoskeleton dynamics," PLos One, vol. 8, no. e0321133, 5 August 2025.

[4] NASA, "Spacecraft Magnetic Test Facility," [Online]. Available: https://etd.gsfc.nasa.gov/capabilities/facilities-listing/spacecraft-magnetic-test-facility/. [Accessed 20 July 2026].

[5] R. Jiménez-Martínez, W. C. Griffith, Y.-J. Wang, S. Knappe, J. Kitching, K. Smith and M. D. Prouty, "Sensitivity Comparison of Mx and Frequency-Modulated Bell–Bloom Cs Magnetometers in a Microfabricated Cell," IEEE Transactions on Instrumentation and Measurement, vol. 59, no. 2, pp. 372-378, 2010.

[6] I. Leniček and L. Ferković, "A calibration standard for low-frequency environmental magnetic field meters," Measurement Journal, vol. 203, 2022.

[7] S. Hellesund, "Measuring Earth's Magnetic Field Using," 2018. [Online]. Available: https://arxiv.org/pdf/1901.00857. [Accessed 20 July 2026].

[8] J. Lunt, "Large-scale production, properties and commercial applications of polylactic acid polymers," Polymer Degradation and Stability, vol. 59, no. 1-3, pp. 145-152, 3 January 1998.

Tyler Pazera (t.pazera@ccscal.com), is a Senior Metrologist at Certified Calibration Service LLC (CCSCal.com) in Tukwila, WA, with more than a decade of experience in precision test and measurement systems.



Just a Lousy Engineer, His Family and a Dream

Seth Ratner
East Hills Instruments



The author with his parents, Cary and Marian Ratner, at East Hills Instruments in Westbury, New York.

Who Is This Lousy Engineer?

I have witnessed many people ask my father who he is. His answer is always the same "I am just a lousy engineer." The truth is that my father, Mr. Cary Ratner, is an inventor who some would say has a fourth-degree black belt when it comes to inventing game-changing instrumentation. Unlike most, I have observed how he keeps his two engineering degrees, Mechanical and Electrical relatively quiet. He doesn't put them on his business card or in his email signature. It is kind of like extremely wealthy and successful business people who are relatively subtle, while those who aren't as wealthy or successful are often the ones who are the flashier ones. My father has a rather impressive resume that packs as much of a punch as his two engineering degrees. He worked with John Fluke to help launch the digital multimeter in the United States. In the 1980s, he helped introduce Jofra to the U.S. market and sold the first dry-block calibrator in the United States.

"I kept getting fired!"

In 1993, he decided it was time to transition from an engineer to a business owner/engineer. When

asked why he started his own business, his answer was rather surprising: "I kept getting fired!"

While smiling, my father explained to me, "Engineers and inventors often come up with ideas. When those ideas succeed, upper management typically receives most, if not all, of the credit. When they fail, the engineer is often the one to receive the blame." As he further explained, "It was time for me to bet on myself." So, he took the philosophy he had developed while working for other companies and applied it to his own business. The philosophy was simple: How can I make an instrument better? That philosophy led to the creation of the house brands: Magnum Pro line of ergonomic calibration pumps and eventually to the Winchester Engineering Auto-Ranging Digital Gauge. Those two brands have become extremely popular in the United States. They are currently used by U.S. Steel, CenterPoint Energy, Atmos Energy, TVA, NRG, and the list appears to go on and on.

Now Let's Talk About the Family

Now let's take a pause to discuss another family member who helped bring East Hills Instruments into reality, my mother, Marian Ratner. Marian is the nucleus of the organization. Although she doesn't have an engineering degree or an accounting degree, she makes up for it by using her gifted superpowers, tremendous common sense, and logic. While my father was working on inventions in the basement and generating sales, my mother would be answering the phone in the kitchen while preparing dinner for the family. By default, she became the company bookkeeper. Her accounting was self-taught and what some would say as being "non-traditional." It was originally done on the back of a paper dinner plate. Once sales grew to the point where the plate was literally full, she moved her work to a ledger and then to multiple ledgers. Once the ledgers became too much, she learned QuickBooks on the computer. That was my mother. Given a task and she can figure it out.

There was still one piece the formula was missing to make East Hills Instruments a success: someone with a strong sales and marketing background. Fortunately, that person happened to be me. I came from the world of marketing consumer products. I was selected as one of the top 40 executives under 40 by Crain's Business Magazine.

I have to say that I credit my parents with trusting me to make business decisions when it came to the direction of the company. Most parents of family businesses have the mindset of "It is my way or the highway." Not my parents, they welcomed and embraced my ideas of adding technology and trusted my sales and marketing skills.

Now that you know some of the backstory, let's transition to why most people are really interested in reading this article. What is this "Auto-Ranging" everyone is talking about? To answer that, we need to understand how and why it all came about.

The "Impossible" Gauge

The original concept of the Auto-Ranging Digital Gauge did not work perfectly. Cary jokingly said that "the first version was like the Wright brothers' airplane; it went about ten yards before it crashed." But the concept worked well enough to prove that the idea was definitely worth pursuing.

My father went back to the drawing board and replaced the mechanical switching concept with software that he developed and patented called A.R.T. (Auto-Ranging Technology) software. Through a series of mathematical equations and software that suppresses electronic noise on the low end, we were able to achieve what seemed impossible. We can now accurately measure from absolute vacuum to 3,000 psi without requiring the technician to change modules, ports, or gauges of different ranges to span the same range. That was the major breakthrough we were looking for. Instead of using multiple instruments to span the range, you can now use just one. This can save our customers a tremendous amount of money, time, and aggravation.

We still remember the "aha" moment, better known by most inventors as "eureka," when we witnessed the Winchester span the entire range, from absolute vacuum to 3,000 psi, at 0.05% of Reading, while our Fluke/DHI primary standard required different modules to cover the same range. In essence, the plane can now fly from New York to France without stopping along the way to switch planes. We decided to create a brand called Winchester Engineering and install our software. But the technological advancements did not stop there.



An East Hills Instruments metrologist and engineer applying the A.R.T. (Auto Ranging Technology) software in the Winchester Engineering gauges at the East Hills Instruments calibration lab.

My father noticed technicians in the field struggling to read traditional digital displays in bright sunlight. They were constantly putting their tinted safety glasses on and off just to see the screen. So, the next question became: How can we make the display easier and safer to use?

The answer was a high-resolution, polarized color touchscreen. That same customer-driven philosophy continues throughout the Winchester platform. The gauge can measure pressure and temperature simultaneously, offers rechargeable batteries, and provides data logging.

I will share my father's secret formula when deciding whether to bring an idea to life. It must save a company money, but just as importantly, it also must include a safety benefit to make it a real winner. That is why we replaced the traditional Velcro or magnet used to keep an instrument suspended in the air with a very strong, metal spring-loaded hook. The hook is designed to provide additional support if a technician were to lose his footing and instinctively grab the gauge for balance. My father explained, "That feature came directly from a customer who had experienced a magnet giving way when he grabbed his gauge to regain his balance."

The newest feature is SECURE DATA LOG. It takes data integrity a step further. Recorded data cannot be altered or manipulated, and the system can generate reports showing pass/fail results as well as graphs. Once again, it saves money and removes human error.

My father always says that these features did not come from sitting in an office guessing what customers wanted. They came from meeting and

listening to our customers. I have a confession: We did not come up with one single idea. Every idea came from our customers.

As CEO of East Hills Instruments, I don't have a boss. I have thousands of bosses, and they are our customers. This is why I am constantly on the road. I log thousands of miles each year and shake thousands of customers' hands. Technology like ZOOM calls is very important, but human interaction is just as important. In order to compete against these big corporate giants, I must run our family business as if it was election day.

I created the first and only industry reality show called ***On Site and Off Grid***, documenting my journey. The show highlights the company and gives viewers a rare and very real glimpse inside the workings of a small, family-owned manufacturing company. In only a few months, the show has generated more than 40,000 views on YouTube and continues to grow.

The next chapter for East Hills Instruments looks extremely exciting. As they say in show business, stay tuned!

Seth Ratner, CEO of East Hills Instruments (easthillsinstruments.com) in Westbury, New York, created a reality show called *On Site and Off Grid* to help promote his family's business and to document the challenges and fun of running a small manufacturing company. Episodes can be streamed from YouTube **@onsiteandoffgrid**.



A screenshot of the rig from the Season Two, Episode Two of *On Site And Off Grid*.



Rohde & Schwarz Presents Unique R&S NTS Transfer Standards for RF power Traceability Applications Up to 170 GHz

Munich, Germany, 13-Oct-2026 — Rohde & Schwarz expands its portfolio of metrological reference solutions with the R&S NTS thermoelectric RF power transfer standards. The new sensor family has been specifically developed for traceable RF power measurements at the highest metrological level and positions itself as a modern replacement for increasingly obsolete thermistor mount standards. Featuring a purely passive, analog design, R&S NTS sensors are suitable both as primary standards in microcalorimeters and as transfer standards for national metrology institutes (NMIs), accredited calibration laboratories and demanding industrial users.

Precise power measurements are a fundamental requirement for high quality industrial production, quality assurance and regulatory compliance. International quality management standards as well as product liability and environmental protection requirements mandate that measurement equipment be calibrated regularly and fully traceable to national standards. For decades, thermistor mount standards served as a reference for traceable RF power. However, the development and manufacturing of new parts ended years ago. Hence, neither replacement parts nor coverage of new frequency bands, such as D-band, are available.

Designed to replace obsolete thermistor standards

This is exactly where the R&S NTS product family from Rohde & Schwarz comes into play: it provides direct, high-performance replacement for thermistor mounts. Its compact form factor fits seamlessly into existing microcalorimeter setups without requiring additional base units. The sensors connect directly to commercially available, traceably calibrated DC nanovoltmeters, allowing laboratories to continue using familiar measurement workflows. At the same time, Rohde & Schwarz offers dedicated software support to simplify the transition from thermistor-based standards to modern thermoelectric technology.

Proven thermoelectric technology for metrology-grade accuracy

The thermoelectric power detector chip in R&S NTS was developed specifically for metrological RF-DC substitution. Its technology builds on more than two decades of proven Rohde & Schwarz experience with R&S NRP power sensors, refined for the highest accuracy requirements.

The transducer features two highly symmetrical RF and DC heaters that ensure near-perfect RF-DC substitution. Optimized heater design delivers excellent linearity, with operating-point influence on the calibration factor reduced to the PPM-per-milliwatt range. Outstanding RF properties such as excellent impedance matching and an extremely flat frequency response minimize uncertainty across the entire operating range. A high maximum input power of +20 dBm and fast settling times further enhance usability in precision calibration environments.

Additional design details underline the metrology focus: a 4-wire DC heater connection for precise power substitution, low-impedance DC lines to minimize parasitic heating losses, and an integrated temperature sensor to compensate even the smallest thermal effects. Moreover, all models feature a robust push pull DC connector, low thermal mass and optional electronic device identification for automated calibration workflows.

A complete solution for the calibration hierarchy

At launch, the R&S NTS family includes multiple coaxial models from DC to 67 GHz and a waveguide model up to 170 GHz with a WR 6.5 connector. Special open, short and mismatched variants are available to support microcalorimeter correction factor determination. The product portfolio will continue to evolve, with further models being added in the future.

With the R&S NTS RF power transfer standards, Rohde & Schwarz empowers users to establish and maintain RF power traceability in-house. Combined with the R&S NRPC calibration solution, R&S NRP RF power sensors and a broad portfolio of RF signal generators , Rohde & Schwarz delivers a complete, end-to-end ecosystem for traceable RF power calibration along the entire calibration hierarchy. For further information visit: https://www.rohde-schwarz.com/product/nts

---

Fluke Introduces New Refrigerated Temperature Calibration Baths

New calibration baths reduce temperature variability, minimize measurement uncertainty, and simplify demanding calibration workflows

Everett, Washington, October 28, 2026 — As calibration laboratories face growing demands for accuracy, repeatability and efficiency, even small temperature variations can introduce uncertainty and compromise confidence in calibration results. Maintaining a precise, uniform temperature environment, particularly at low temperatures can be challenging, adding complexity to already demanding calibration workflows. Addressing these challenges, Fluke today announced the 7508, 7511 and 7512 Refrigerated Temperature Calibration Baths, designed to deliver exceptional temperature stability and uniformity

while automating critical calibration tasks.

Engineered specifically for metrology rather than adapted from general laboratory equipment, the refrigerated baths provide temperature control as low as –10 °C, with stability as precise as ±0.0007 °C and uniformity as precise as ±0.003 °C. The baths are designed to eliminate temperature gradients through balanced stirring while precisely managing heating and cooling to maintain a consistent environment for calibration.

"Fluke Calibration baths have a long legacy in metrology labs because their specifications mean something," said Ron Ainsworth, Senior Product Manager at Fluke Calibration. "The 7508, 7511 and 7512 keep the stability and uniformity metrologists trust and carry that legacy forward on a modernized platform that's easier to use, connect, automate and maintain."

The 7508/7511/7512 baths automate temperature sensor calibration when paired with the Fluke Calibration 1586A Super-DAQ and MET/TEMP II software. Computer-controlled solenoid valves precisely balance the heating and cooling system, while the software automates calibration tasks and data collection. The system supports USB and RS-232 connectivity and is designed for future support of CalStudio.

Available in multiple configurations, the baths support the calibration and testing of temperature sensors used across manufacturing, R&D and test-and-measurement applications, ranging from verifying industrial temperature controllers to maintaining highly accurate laboratory reference standards. Applications include Platinum Resistance Thermometer (PRT), thermistor and thermocouple calibrations, as well as maintaining triple-point-of-water cells. An optional 2033 IR cavity can be integrated into the 7508 bath to support precision infrared calibration applications.

The baths also are designed to simplify day-to-day operation and maintenance. The new baths incorporate automation, data collection capabilities and an updated user interface that help reduce setup complexity and operator intervention.



Direct-drive stirrer motors, pump-free balanced stirring and full fluid drainage help simplify maintenance and support reliable performance over time. The baths use CFC-free refrigerants. With increasingly precise measurements driving the evolution of modern calibration laboratories, Fluke's refrigerated baths are designed to help labs establish a more controlled, automated and repeatable approach to temperature calibration.

For more information about the 7508/7511/7512 Refrigerated Temperature Calibration Baths, visit Fluke Calibration.

Fluke is a registered trademark of Fluke Corporation. For more information, visit the Fluke website.

AXIOSPEC
ALWAYS AUDIT-READY

Axiospec Releases Free Suite of 15 Metrology Calculators

KNOXVILLE, Tenn., August 7, 2026 — Axiospec, a cloud calibration management platform from CaliTech LLC, has released a free suite of 15 metrology and quality calculators at axiospec.com/tools. No signup or email is required.

The suite covers the calculations calibration technicians and quality engineers do most: measurement uncertainty budgets per JCGM 100 (GUM), Type A uncertainty, Welch-Satterthwaite effective degrees of freedom, TUR and TAR, guard banding with ILAC-G8 decision rules, resolution uncertainty, thermocouple and RTD uncertainty, Gage R&R and attribute agreement studies per AIAG MSA, bias and linearity, process capability (Cp and Cpk), calibration intervals from reliability targets, drift rate, and a calibration audit readiness self-assessment.

Every calculator runs in the browser, shows its method and formula, and cites the standard it follows. Nothing is stored or tracked.

"Most free calculators out there skip the stuff auditors actually ask about. Where did the coverage factor come from, what decision rule did you apply. We built the ones we wished existed and made them free," said Timothy Malone, founder of Axiospec.

Axiospec also offers a live demo of its calibration management platform at axiospec.com/demo that runs without signup.

About Axiospec: Axiospec is calibration management software for manufacturers and labs working under ISO 9001, ISO/IEC 17025, AS9100, ISO 13485, and IATF 16949. It includes a tamper-evident audit trail, mobile apps for iOS and Android, built-in MSA studies, and a free plan for up to 50 instruments. Learn more at axiospec.com.

Rethinking CMCs for the Digital Age

Michael L. Schwartz
Cal Lab Solutions, Inc.

Recently, I worked with a customer to convert their printed Scope of Accreditation into a digitalized format. That experience made one thing clear: the current format we use for a Scope of Accreditation must change before it can be considered ready for Industry 4.0—or whatever we call the next generation of metrology in the digital age.

The problem is two-part. First, there is widespread inconsistency not only between one accreditation body and another, but also between labs accredited by the same body. Second, scopes remain locked in static, paper-era formats—PDFs and rigid tables—that modern digital systems cannot natively ingest or compute.

On paper, accreditation to ISO/IEC 17025 is meant to signal reliable technical competence. In practice, accreditation bodies vary in how strictly their assessors audit technical methods, witness calibrations, and enforce measurement uncertainty rules. Because ISO/IEC 17025 provides a broad framework rather than prescriptive procedures, two laboratories accredited by the very same organization can rely on different reference standards, methods, and uncertainty budgets—producing conflicting results on identical instruments.

This dual layer of inconsistency is well documented in the calibration industry. In a study published in *CAL LAB: The International Journal of Metrology* ("Customer Technical Qualification in Analyzing of the Accreditation Scopes of Calibration Laboratories," Oct–Dec 2020), researchers compared ISO/IEC 17025 scopes across four major accreditation bodies—A2LA, UKAS, DAkkS, and CGCRE—for routine dimensional tools like micrometers and calipers. While differing uncertainty levels across labs naturally reflect equipment and environmental tiers, the authors found sharp inconsistencies in how Calibration and Measurement Capabilities (CMCs) were formatted and bounded under separate supplementary rules. Within the same accreditation body, declared CMCs for identical ranges swung from 0.3 μm to 22 μm for a 300 mm micrometer and 1.6 μm to 29 μm for a 150 mm caliper—making an apples-to-apples comparison nearly impossible.

I saw this inconsistency firsthand with my customer, whose scope listed several separate CMCs where the only variable that changed was the Unit Under Test's (UUT) measurement resolution. Under ISO/IEC 17025 and ILAC-P14, a CMC represents the smallest uncertainty a laboratory can achieve under routine conditions using a single "best existing device." When a customer submits an instrument with coarser resolution, that added uncertainty belongs on the individual calibration certificate—not as duplicate rows on the scope. Although ILAC-P14 already permits equation-based CMCs, scopes still routinely bloat with resolution-tiered entries, proving how unevenly the standard is enforced.

This brings us to the second problem—and its solution. Rather than patching a static system built for printed binders, we need to move accreditation into the digital age. To preserve impartiality under ISO/IEC 17011, accreditation bodies should not invent proprietary equations; instead, they should recognize standardized, consensus-based, GUM-compliant uncertainty models developed by national metrology institutes and technical committees, published in machine-readable formats. Under this parameterized model, laboratories validate their specific physical error contributors, while variables like UUT resolution become dynamic inputs to an equation rather than triggers for duplicate CMCs.

Shifting to machine-readable, formula-driven scopes transforms both publication and assessment. Assessors would spend far less audit time checking repetitive spreadsheet formatting and more time witnessing bench procedures, verifying that no physical error sources are omitted, and confirming the traceability of inputs—such as reference standards, environmental conditions, and applied UUT resolution.

We cannot enter the digital age while tethered to a paper-based accreditation model. Moving past static "scope bloat" toward a unified, formula-driven architecture will turn accreditation from a clerical hurdle into a true engine of trust—standardizing how competence is expressed, eliminating ambiguity, and finally aligning metrology oversight with machine-readable workflows.

METROLOGY.NET®

Find the order
in your metrology

EQUIPMENT
All assets managed and traceable

MEASUREMENTS
Streamlined processes and trustworthy results

INFORMATION
Connected data, knowledge and decisions

A Zen garden is designed to create calm, clarity, and balance. With only a few carefully arranged elements, it reveals order, harmony, and meaning.

Metrology.NET applies the same principle to your metrology enviroment. It connects equipment, measurements and information as one integrated system — reducing complexity and improving traceability.

Why it matters

- ✓ Greater visibility across your metrology activities
- ✓ Better control of equipment, workflows and data
- ✓ Improved traceability and compliance
- ✓ More confidence in decisions and results

EQUIPMENT MANAGEMENT | CALIBRATION WORKFLOWS | DATA & CERTIFICATE MANAGEMENT | REPORTS & ANALYTICS | COMPLIANCE & STANDARDS | INTEGRATIONS & CONNECTIVITY

Metrology is not just the instruments. It is the system between them.

NEW Contamination Prevention System

Additel
Metrology Made Simple



Additel 760A

Automatic Pressure Calibrator

Pressure up to
375 PSI

Accuracy to
0.01%FS

New Model
ADT760S

Learn more at
www.additel.com

Specifications

Weight (lb)	**4**
Size (in)	**9.3 x 4.3 x 2.8**
Battery Life (hr)	**10**
Certification	**ISO 17025**



